# ULTRA™

BY

minkaAire®

A Minka Group® Co.

ENERGY STAR

*INSTRUCTION MANUAL WARRANTY CERTIFICATE*

Manual design and all elements of manual design are protected by U.S. Federal and/or State Law, including Patent, Trademark and/or Copyright laws.

The Minka-Aire® warranty is for one (1) year from the date of purchase from an authorized Minka-Aire® dealer. This warranty is only valid to the original purchaser or user against all defects in material and workmanship (light bulbs excluded) for one (1) full year. Additionally, Minka-Aire® warrants the motor only for the lifetime of the Minka Aire ceiling fan (excluding wall controls and electrical components), to the original purchaser or user.

* The warranty is voided with the use of any non- Minka-Aire®electrical devices, E.g., wall controls or electrical dimmer switches, etc...
* The warranty is void once the original purchaser or user ceases to own the fan or the fan is moved from its original point of installation.
* The warranty is void with the use of any hanger bracket (non-Minka Aire or non-fan specific) other than the hanger bracket supplied & installed with this specific fan.

## Warranty Service Information

To obtain warranty service during the warranty period, the purchaser should return the fan with the sales receipt to the original place of purchase. The authorized Minka-Aire® dealer, at its sole discretion, will either repair or replace the fan after verifying the legitimacy of the warranty claim. Replacement is subject to availability of the same model. If the model is unavailable it will be replaced by one of equal value. This is a limited warranty; the original purchaser or user is responsible for the cost of removal and reinstallation of repaired or replacement product.

To obtain the name of the Minka-Aire® authorized dealer nearest you call the Minka-Aire® customer care department at 1-800-307-3267, or contact Minka-Aire® through www.minkagroup.net and write to: "Ask Mr. Minka" to answer any questions or if you require assistance.

Date Purchased _____ Store Purchased _____ Model Number F588-SP Serial Number _____

# CONTENTS


SAFETY RULES....1
PACKAGE CONTENTS....2
INSTALLING THE FAN....3
HANGING THE FAN....4
ELECTRICAL CONNECTIONS....5
INSTALLING THE WALL TRANSMITTER....6
FINISHING THE INSTALLATION....7
BLADE INSTALLATION....8
ATTACHING THE SWITCH CUP....9
OPERATING THE REMOTE CONTROL/WALL CONTROL....10
CARE OF YOUR FAN....11
TROUBLESHOOTING....12
SPECIFICATIONS....13



minkaAire® A Minka Group® Co.
1151 W. Bradford Court, Corona, CA 92882 • For Customer Assistance Call: 1-800-307-3267



american lighting association
UL® LISTED E75795

1

# *SAFETY RULES*

1. Before you begin installing the fan, shut power off at the circuit breaker of the fuse box.
2. Be cautious! Read all instructions and safety information before installing your new fan. Review accompanying assembly diagrams.
3. Make sure that all electrical connections comply with local codes, ordinances, or National Electrical Codes. Hire a qualified electrician or consult a do-it-yourself wiring handbook if you are unfamiliar with installing electrical wiring.
4. Make sure the installation site you choose allows the fan blades to rotate without any obstructions. Allow a minimum clearance of 7 feet from the floor and 18 inches from the tip of the blades to the wall.
5. If you are mounting the fan to a ceiling fan outlet box, use a U.L. Listed metal octagonal outlet box marked "Acceptable for Fan Support". Secure the box directly to the building structure. The outlet box and its support must be able to support the moving weight of the fan (at least 50 pounds) Do not use a plastic box.
6. Caution: To reduce the risk of injury use only the screws provided with the outlet box in conjunction with the lock washers provided with the fan.
7. If you are mounting the fan to a joist, make sure it is able to support the moving weight of the fan (at least 50 pounds).
8. After you install the fan, make sure that all mounting components are secured to prevent the fan from falling.
9. Do not insert anything into the fan blades while the fan is operating.
10. Turn the fan off and wait for the blades to stop completely before proceeding with maintenance or cleaning.

NOTE: The important safeguards and instructions appearing in this manual are not meant to cover all possible conditions and situations that may occur. It must be understood that common sense, caution and care are factors which can not be built into this product. These factors must be supplied by the person (s) installing, caring for and operating the unit.

NOTE: READ AND SAVE ALL INSTRUCTIONS!

## WARNING

TO REDUCE THE RISK OF FIRE, ELECTRIC SHOCK OR OTHER PERSONAL INJURY, MOUNT FAN ONLY TO A U.L. LISTED OUTLET BOX OR SUPPORTING SYSTEM MARKED ACCEPTABLE FOR FAN SUPPORT AND USE MOUNTING SCREWS PROVIDED WITH THE OUTLET BOX IN CONJUCTION WITH THE LOCK WASHERS PROVIDED WITH THE FAN. MOST OUTLET BOXES COMMONLY USED FOR FAN SUPPORT OF LIGHTING FIXTURES ARE NOT ACCEPTABLE FOR FAN SUPPORT AND NEED TO BE REPLACED. CONSULT A QUALIFIED ELECTRICIAN IF IN DOUBT.

TO REDUCE THE RISK OF PERSONAL INJURY, DO NOT BEND THE BLADE HOLDERS WHILE INSTALLING, BALANCING THE BLADES OR CLEANING THE FAN. DO NOT INSERT FOREIGN OBJECTS BETWEEN ROTATING FAN BLADES.

TO REDUCE THE RISK OF FIRE OR ELECTRONIC SHOCK, THIS FAN ONLY CAN USE UC7067RC SOLID-STATE SPEED CONTROL WITH UC9040T WALL CONTROL ONLY.

2

# *PACKAGE CONTENTS*

Unpack your fan and check the contents. You should have the following items:

1. Fan blades (5)
2. Hanger bracket
3. Canopy
4. Canopy cover
5. Coupling cover
6. Standard downrod ass'y
7. Minimum-length downrod
   (for close to the ceiling installation only)
8. Fan motor/housing ass'y
9. Blade holders (5)
10. Switch cup
11. Hand Held Transmitter+holder+2 mounting screws

12a. Wall transmitter Incl. 2 mounting screws and 3 wire nuts

12b. Wall plate w/2 mounting screws

13. Extra Wall Plate w/2 Mounting screws
14. Receiver (includes 6 wire nuts)
15. Balancing kit

A. Mounting hardware:
   #10 x 1.5" Wood screws (2 PCs.)
   #8 x 3/4" Machine screws (2 PCs.)
   Lock washers (2 PCs.)
   4mm star washers (2 PCs.)
   Wire nuts (3 PCs. )
   Washers (2 PCs.)

B. Blade attachment hardware:
   3/16" x 7.5 mm screws (16 PCs.)
   Fiber washers (16 PCs.)

C. Bracket holder hardware:
   1/4" x 1/2" Screws with lock washers (11 PCs.)

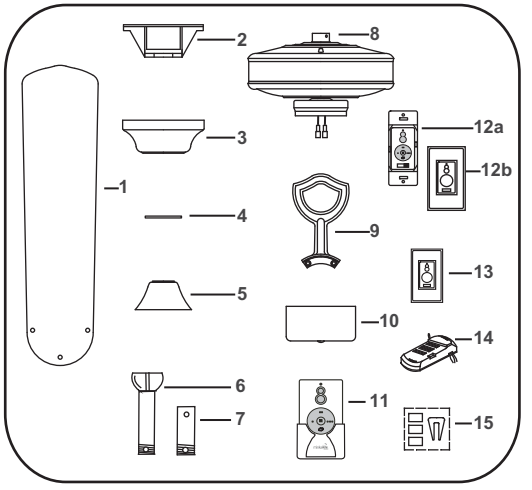


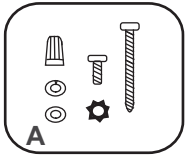


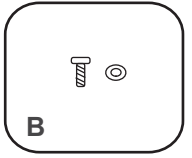


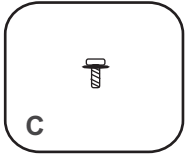

# INSTALLING THE FAN

Tools Required: Phillips screw driver; slotted screw driver; step-ladder; wire cutters; electrical tape.

## MOUNTING OPTIONS

If there isn't an existing mounting box, then read the following instructions. Disconnect the power by removing fuses or turning off circuit breakers.

Secure the outlet box directly to the building structure. Use appropriate fasteners and building materials. The outlet box and its support must be able to fully support the moving weight of the fan (at least 50 lbs.). Use a UL Listed metal outlet box. Do not use a plastic outlet box.

Figure 1, 2 and 3 are examples of different ways to mount the outlet box.

Note:You may need a longer downrod to maintain proper blade clearance when installing on a steep, sloped ceiling. Longer downrods are available from your Minka-Aire® dealer.

To hang your fan where there is an existing fixture but no ceiling joist, you may need to install a hanger bar as shown in Fig. 4 (available at your Minka-Aire® dealer).

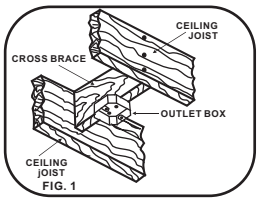

FIG. 1

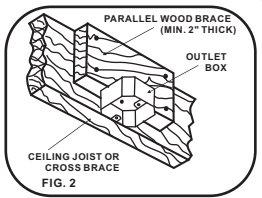

FIG. 2

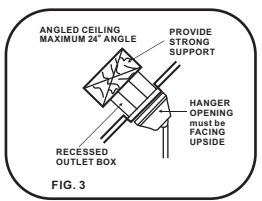

FIG. 3

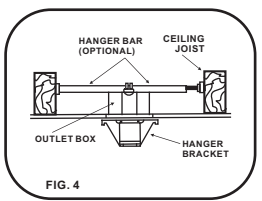

FIG. 4

4

# *HANGING THE FAN*

WARNING: All of the parts, hardware and components such as the hanger bracket and hanger ball have been provided for your safety and the proper installation of your new ceiling fan. The use of other parts, hardware or components not supplied by Minka Aire® with the fan will void the Minka Aire® Warranty.

REMEMBER to turn off the power. Follow the steps below to hang your fan properly:

Step 1. Secure the hanger bracket to the ceiling outlet box using screws included with your outlet box, lock washers included with the fan. (Fig.5)

Step 2. Loosen the two set screws and remove the hitch pin and lock pin from the top coupling of the motor assembly. (Fig. 6)

Step 3. Remove hanger ball from downrod assembly by loosening set screw, removing the cross pin, and sliding ball off rod. (Fig.7)

Step 4. Carefully feed fan wires up through the downrod. (Fig. 8) Thread the rod into the coupling, next line up holes and replace lock pin and hitch pin. Tighten set screws.

Step 5. Slip coupling cover, canopy cover and canopy onto downrod. (Fig. 9) Carefully reinstall hanger ball onto rod being sure that cross pin is in the correct position, set screws are tighten and wires are not twisted.

NOTE: DO NOT INSTALL THE COUPLING COVER IF YOU PLAN TO USE THE MINIMUM LENGTH DOWNROD.

Step 6. Now lift motor assembly into position and place hanger ball into hanger bracket. Rotate until the check groove has dropped into the registration slot and seats firmly. (Fig. 10) Rod should not rotate if this is done correctly.

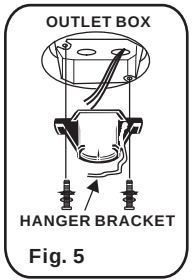

Fig. 5

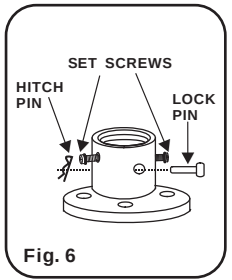

Fig. 6

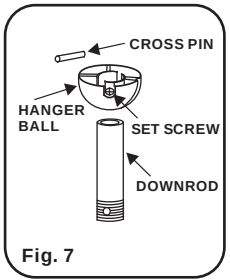

Fig. 7

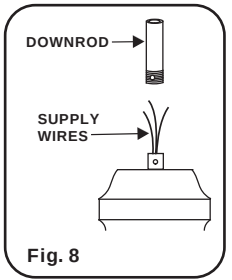

Fig. 8

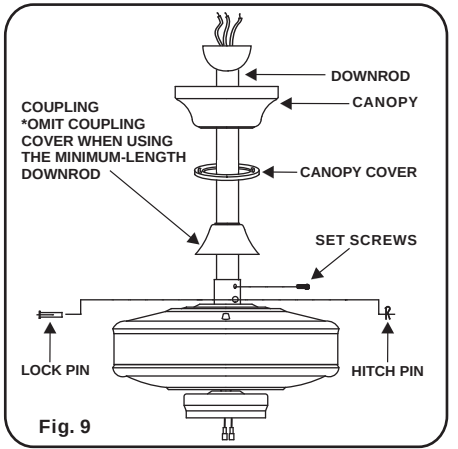

Fig. 9

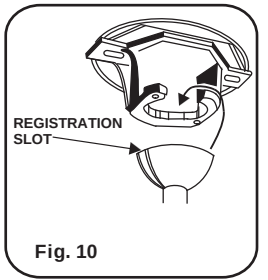

Fig. 10

5

# *ELECTRICAL CONNECTIONS*

WARNING: To avoid possible electrical shock be sure electricity is turned off at the main fuse or breaker box before wiring.

NOTE: The Aire Control® System is equipped with a learning frequency function which has 256 code combinations to prevent potential interference from other remote units. The frequency on your Receiver and Transmitter units have been preset at the factory. (Fig. 11) No frequency change is necessary, should you desire to install another fan within the same home or area with a seperate frequency code please see the "frequency interference" troubleshooting section of this instruction manual to learn how to change the frequency.

Step 1. Insert Receiver into Hanger Bracket with the flat side of the Receiver facing the ceiling. (Fig. 12)

Step 2. Motor to Receiver Electrical Connections: Connect the WHITE wire from the fan to the WHITE wire marked "TO MOTOR N" from the Receiver. Connect the BLACK wire from the fan to the BLACK wire marked "TO MOTOR L" from the Receiver. Connect the BLUE wire from the fan to the BLUE wire marked "For Light" from the Receiver.

NOTE: If your ceiling fan features an UP Light: Connect the ORANGE wire from the fan to the ORANGE wire marked "For Up Light" from the Receiver. Otherwise disregard this step and proceed to secure all wire connections with the plastic wire nuts provided. (Fig. 13 & 14)

Note: Fan must be installed at a maximum distance of 40 feet from the transmitting unit for proper signal transmission between the transmitting unit and the fan's receiving unit.

**Step 3. Receiver to House Supply Wires Electrical Connections: Connect the WHITE wire (Neutral) from the outlet box to the WHITE wire marked "AC in N" from the receiver. Connect the BLACK wire (Hot) from the outlet box to the BLACK wire marked "AC in L" from the receiver. Secure all wire connections with the plastic wire nuts provided. (Fig. 13 & 14)**

**Step 4. If your outlet box has a GROUND wire (Green or Bare Copper) connect this wire to the Hanger Ball and Hanger Bracket Ground wires. If your outlet box does not have a Ground Wire, then connect the Hanger Ball and Hanger Bracket Ground Wires together. Secure wire connection with the plastic wire nut provided. (Fig. 13 & 14)**

**After all splices are made, check to make sure there are no loose strands. As an additional precaution we suggest to secure the plastic wire connectors to the wires with electrical tape.**

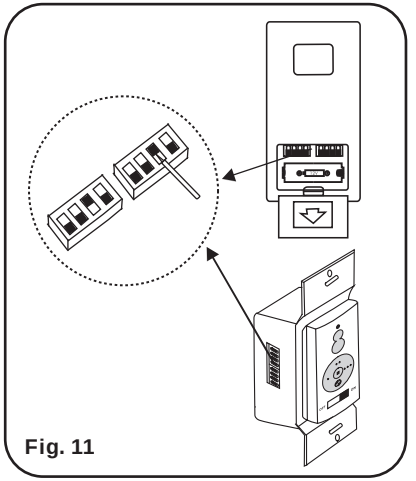

Fig. 11

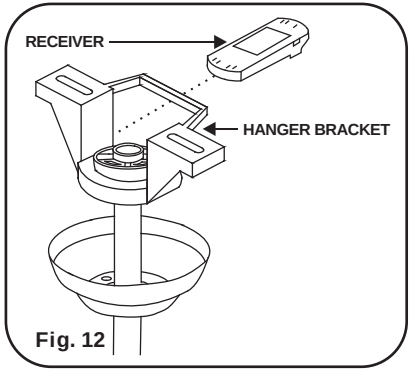


Fig. 12

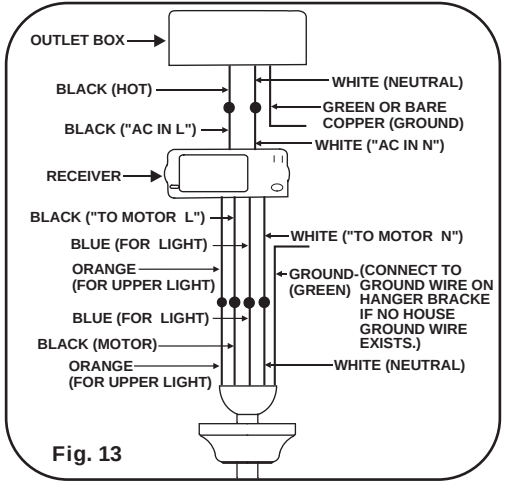
OUTLET BOX
BLACK (HOT)
WHITE (NEUTRAL)
GREEN OR BARE COPPER (GROUND)
BLACK ("AC IN L")
WHITE ("AC IN N")
RECEIVER
BLACK ("TO MOTOR L")
WHITE ("TO MOTOR N")
BLUE (FOR LIGHT)
ORANGE (FOR UPPER LIGHT)
GROUND (GREEN)
(CONNECT TO GROUND WIRE ON HANGER BRACKE IF NO HOUSE GROUND WIRE EXISTS.)
BLUE (FOR LIGHT)
BLACK (MOTOR)
ORANGE (FOR UPPER LIGHT)
WHITE (NEUTRAL)

Fig. 13

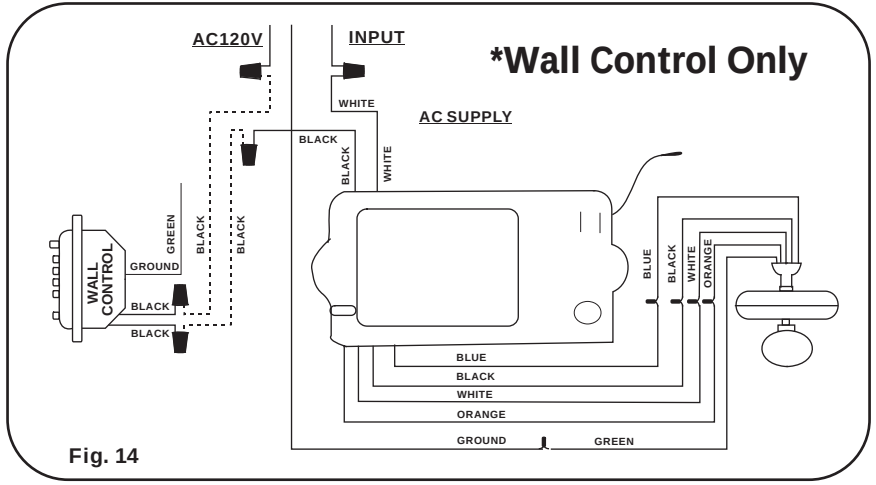
AC120V
INPUT
*Wall Control Only
AC SUPPLY
WHITE
BLACK
BLACK
WHITE
WALL CONTROL
GROUND
BLACK
BLACK
GREEN
BLACK
BLACK
BLUE
BLACK
WHITE
ORANGE
BLUE
BLACK
WHITE
ORANGE
GROUND
GREEN

Fig. 14

# *INSTALLING THE WALL TRANSMITTER (Wall Control Only)*

WARNING! HOOK UP "IN SERIES" ONLY. DO NOT CONNECT NEUTRAL SUPPLY WIRE OF ELECTRIC CIRCUIT TO THE TRANSMITTER WALL SWITCH, DAMAGE TO THE TRANSMITTER WALL SWITCH AND POSSIBLE FIRE COULD OCCUR.

Step 1. Remove the existing wall plate and switch from the wall outlet box.

Step 2. Make the electrical connections as shown in Fig.13. If your outlet box has a ground wire (Green or Bare Copper) connect the Transmitter's ground wire directly to one of the screws from the outlet box. Secure all wire connections with the plastic wire nuts provided.

Step 3. Carefully tuck the wire connections inside the outlet box. Use the screws provided to secure the wall transmitter and wall plate to the outlet box. (Fig. 14)

NOTE: Your Aire Control™ System includes two sets of face and decorative plate color options. The wall control comes with standard white faceplate attached. If you desire to replace it with the Ivory color faceplate included, use a small flat screw driver and gently pry it apart from the top or bottom of the plate.

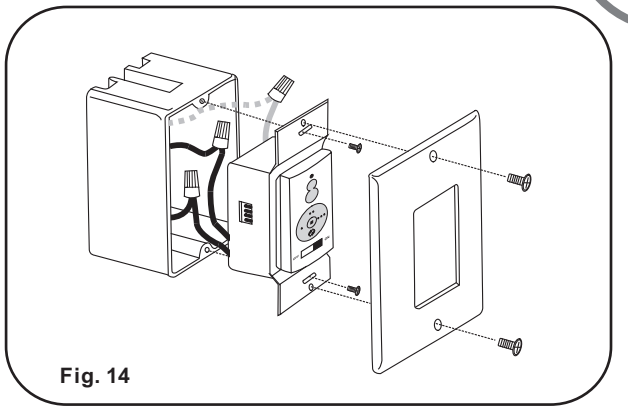

Fig. 14

7

# *FINISHING THE INSTALLATION*

Step 1. Remove 1 of the 2 screws from the bottom of the hanger bracket and loosen the other one half a turn from the screw head.

Step 2. Slide the canopy up towards the hanger bracket and place the key hole on the canopy over the screw on the hanger bracket, turn canopy until it locks in place at the narrow section of the key holes. (Fig. 15)

Step 3. Align the circular hole on canopy with the remaining hole on the hanger bracket, secure by tightening the two set screws.

Note: Adjust the canopy screws as necessary until the canopy and canopy cover are snug.

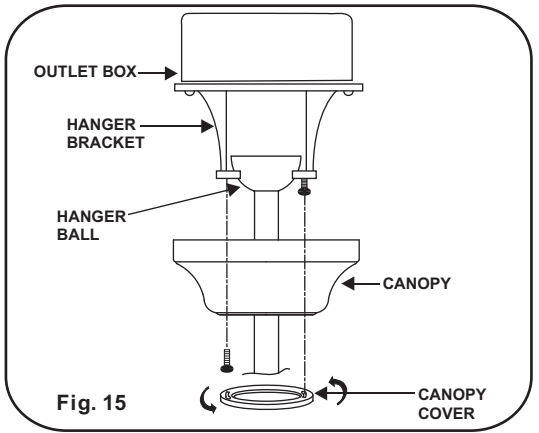

Fig. 15

# BLADE INSTALLATION

8

**THE FOLLOWING OPERATION MUST BE ACCOMPLISHED BEFORE INSTALLING THE LIGHT KIT.**

**Caution: Remove 5 rubber packing mounts and discard before installation.**

**Step 1. Attach the fan blade to the blade holder using the screws and fiber washers provided. Tighten screws securely. Repeat process for remaining blades.(Fig. 16)**

**Step 2. Rotate the motor so that the screw holes in motor are aligned with the holes in blade holder and secure with proper screws. Repeat process for the other blade holders. (Fig. 17)**

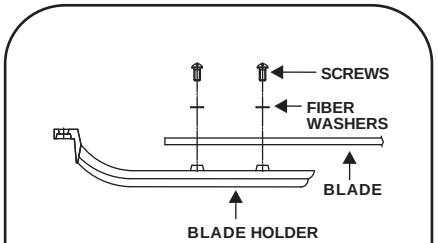

Fig. 16

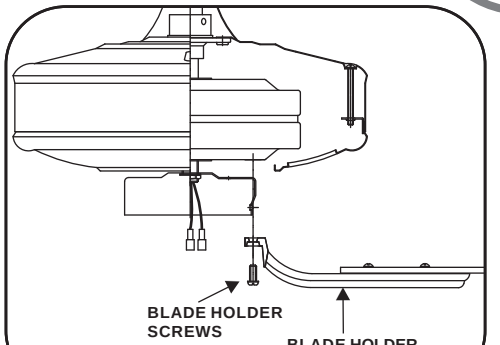

Fig. 17

9

# ATTACHING THE SWITCH CUP

Remove the screws from the switch cup plate. Slide switch cup up against plate and rotate it until the screw holes are aligned. Secure switch cup to plate using the screws removed earlier. (Fig. 18)

NOTE: DO NOT PINCH WIRES BETWEEN THE SWITCH HOUSING AND THE SWITCH CUP PLATE.

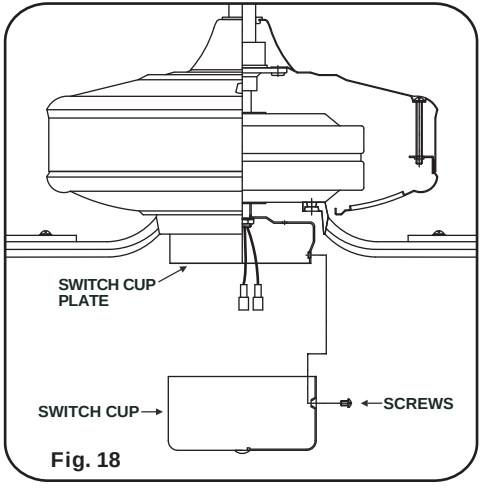


Fig. 18

# *OPERATING THE REMOTE CONTROL/WALL CONTROL*

**Remote Control only: Install a A23 12 volt battery (included). To prevent damage to transmitter remove the battery if not used for long periods of time.**

Restore Power to Ceiling Fan.

A. ● ● ● Buttons:
These buttons are used to set the fan speeds as follows;
● = Low Speed
● ● = Medium Speed
● ● ● = High Speed

B. ■ Button:
This button turns the fan off.

C. Button:
These buttons turn the light ON or OFF and also control the brightness settings of the light. The following instructions apply to ceiling fans that feature a DOWN light ( button) only or ceiling fans that feature an UP light ( button) and a DOWN light ( button) that are controlled independent of each other;

Press and release the button for the desired light to turn the light ON or OFF. Press and hold the button to set the desired light brightness. The light will cycle between bright and dim settings as long as the button is pressed. The light key has an automatic auto-resume feature that allows the light to remain at the same brightness as the last time it was turned off.

D. OFF-ON Slide Button (Wall Control Fans Only)
This button turns the power Off and On to the Fan and Light(s).

E. Button: (Full Function Remote Control Units Only)
This button is used to change the direction of the rotation of the blades; forward for warm weather or reverse for cool weather.

NOTE: If your Remote Control or Wall Control does not have a " " button, Please look for a slide reverse switch on the motor housing.

Speed settings for warm or cold weather depend on factors such as room size, ceiling height and number of fans.

NOTE: To change the direction of the rotation of the blades the fan must be in operation mode.

Warm Weather (forward)
A DOWNWARD airflow creates a cooling effect as shown in Figure 19. This allows you to set your air conditioner on a warmer setting without affecting your comfort.

Cool Weather (Reverse)
An UPWARD airflow moves warmer air off the ceiling area as shown in Figure 20. This allows you to set your heating unit on a cooler setting without affecting your comfort.

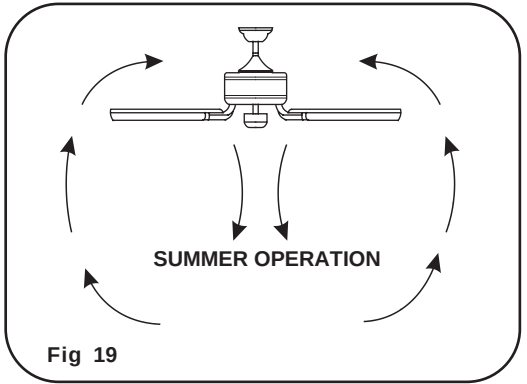

Fig 19

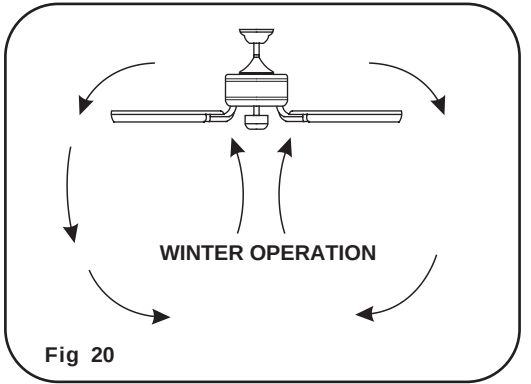

Fig 20

# CARE OF YOUR FAN

Here are some suggestions to help maintain your fan.

1. Because of the fan's natural movement some connections may become loose. Check the support connections, brackets and blade attachments twice a year. Make sure they are secure. (It is not necessary to remove fan from the ceiling).

2. Clean your fan periodically to help maintain its new appearance over the years. Use only a soft brush or lint free cloth to avoid scratching the finish. Plated finishes are sealed with lacquer to minimize discoloration or tarnishing. Do not use water when cleaning, this could damage the motor, wood blades or possibly cause an electrical shock.

3. If your fan is provided with wood veneer blades; you can apply a light coat of furniture polish for additional protection and enhanced beauty. Cover small scratches with a light application of shoe polish.

4. Use a lint free lightly damp cloth or duster to remove dust from the blades.

5. There is no need to oil your fan. The motor has permanently lubricated bearings.

6. If your fan is provided with glass shades, clean with lukewarm soapy water and a soft cloth or sponge. DO NOT IMMERSE GLASS SHADES IN HOT WATER. DO NOT PUT GLASS SHADES INTO AN AUTOMATIC DISHWASHER.

WARNING!
MAKE SURE THE POWER IS OFF AT THE ELECTRICAL PANEL BOX BEFORE YOU ATTEMPT ANY REPAIRS. REFER TO THE SECTION, "ELECTRICAL CONNECTIONS".

12

# *TROUBLESHOOTING*

SYMPTOM
Fan will not start

SOLUTION

- Check to make sure the wall switch is turned on.
- Check circuit fuses or breakers.
- Caution! Make sure the power is turned off before performing the following steps. Remove canopy and check wire connections.
- If using a remote controlled fan; check to see that the dip switches from transmitter and receiver are set to the same frequency code.
- Check wall control transmitter connections (if applicable).
- Note: Fan must be installed from a maximum distance of 40 feet from the transmitting unit for proper signal transmission between the transmitting unit and the fan's receiving unit.

SYMPTOM
Fans/Light Turn On and Off Unexpectedly

SOLUTION

- This is caused by interference, change the code frequency from the transmitter and receiver. Any code combination will operate the fan or light (remote controlled fans only). (if applicable)

SYMPTOM
Fan Sounds Noisy

SOLUTION

- Allow a 24-hour "break in" period. Most noises associated with a new fan will go away during this time.
- Make sure outlet box is secured to building structure, if necessary use the wood screws provided to further secure outlet box to joist.
- Make sure hanger bracket is secure to the outlet box, screws are tight.

SYMPTOM
Fan Wobble

SOLUTION

- NOTE: All blade sets are grouped by weight. Because wood and plastic blades vary in density, the fan may wobble even though blades are matched.
- Make sure outlet box is secured to building structure, if necessary use the wood screws provided to further secure outlet box to joist.
- Make sure hanger bracket is secure to the outlet box, screws are tight.
- Use the balancing kit provided if the wobble is excessive (follow instructions included with balancing kit)

**SYMPTOM**
**Frequency Interference**

**SOLUTION**

1. **Turn the power off to your ceiling fan.**

2. **Please use a small size tool to change the frequency settings on the control system.**

3. **Return power to the unit.**
   **Note: After the AC power is on, do not press any other button on the transmitter before pressing the "Stop" button, doing so will cause the procedure to fail.**

4. **Within 60 seconds of turning the Fan's AC power ON. Press the transmitter's "Stop" button and hold the "Stop¡" button for 10 seconds.**

5. **Once the receiver has detected the set frequency, the down light of your fan if applicable will blink twice. (there is no indication if your fan is not equipped with a light).**

6. **The receiver has now learn the frequency which has been selected on the transmitter. After completing the steps above, you should be able to operate the ceiling fan and light. If the fan is not responding to the transmitter, please turn the power off to the receiver, and repeat the process.**

13

# *SPECIFICATIONS*

These are typical readings. Your actual fan may vary. They do not include amps and wattage used by the light(s).

| Fan Size | Speed | Volts | Amps | Watts | RPM | CFM | N.W. | G.W. | C.F. |
|---|---|---|---|---|---|---|---|---|---|
| 54" | Low | 120 | 0.31 | 12.2 | 65 | 2019 | 10.7 kgs | 11.8 kgs | 1.65' |
| | Medium | 120 | 0.47 | 33.7 | 124 | 4147 | | | |
| | High | 120 | 0.64 | 76.4 | 201 | 6341 | | | |

# PERFORMANCE AND ENERGY INFORMATION

| FAN SPEED | AIRFLOW (CFM)* | POWER USE (watts) | AIRFLOW EFFICIENCY (CFM/watt) |
|---|---|---|---|
| Low | 2019 | 12.2 | 166 |
| Medium | 4147 | 33.7 | 123 |
| High | 6341 | 76.4 | 83 |

**Ceiling fan airflow is measured in cubic feet per minute (CFM). Power use is measured in watts. To maximize energy savings:**

- Choose a fan with high airflow efficiency (CFM/watt).
- Use ENERGY STAR® -labeled lighting in your fan.
- Remember to switch off your fan when you leave the room.

* Measured according to the ENERGY STAR® approved Solid State test method

*For any additional information about your Minka Aire® Ceiling fan, please write to;*

minkaAire® A Minka Group® Co. 1151 W. Bradford Court, Corona, CA 92882 • For Customer Assistance Call: 1-800-307-3267