The Extraordinaire™

Orbital Ceiling Fan

WARNING: Support Directly From Building Structure

Net Weight 14.5 lbs. or 6.59 kg.

Model No. OF110**

OWNER'S MANUAL

READ AND SAVE THESE INSTRUCTIONS

FANIMATION

Important Safety Instructions

WARNING: To avoid fire, shock and serious personal injury, follow these instructions.

1. Read your owner's manual and safety information before installing your new fan. Review the accompanying assembly diagrams.
2. Before servicing or cleaning unit, switch power off at service panel and lock service panel disconnecting means to prevent power from being switched on accidentally. When the service disconnecting means cannot be locked, securely fasten a warning device, such as a tag, to the service panel.
3. Be careful of the fan and blades when cleaning, painting, or working near the fan. Always turn off the power to the ceiling fan before servicing.
4. Do not insert anything into the fan blades while the fan is operating.
5. Do not operate reversing switch until fan blades have come to a complete stop.

Additional Safety Instructions

1. To avoid possible shock, be sure electricity is turned off at the fuse box before wiring, and do not operate fan without blades.
2. All wiring and installation procedures must satisfy National Electrical Codes (ANSI/ NFPA 70-1999). Use the National Electrical Code if Local Codes do not exist. The ceiling fan must be grounded as a precaution against possible electrical shock. Electrical installation should be made or approved by a licensed electrician.
3. The fan base must be securely mounted and capable of reliably supporting at least 50 lbs. Outlet boxes are not acceptable for fan support. See page 4 of owner's manual for support requirements. Consult a qualified electrician if in doubt.
4. **CAUTION:** To reduce the risk of personal injury, mount the fan base to a ceiling joist or structural member using the hardware provided with your fan.

WARNING: Support Directly from Building Structure.

5. The fan must be mounted with the fan blades at least 7 feet from the floor to prevent accidental contact with the fan blades.
6. Follow the recommended instructions for the proper method of wiring your ceiling fan. If you do not have adequate electrical knowledge or experience, have your fan installed by a licensed electrician.
7. Suitable for use with solid-state speed controls.

WARNING: To reduce the risk of fire or electric shock, this fan should only be used with Fan Speed Control Part No. VR902F, manufactured by JOYKIM SCIENCE & TECH. CO., LTD.

WARNING: TO REDUCE THE RISK OF SHOCK, THIS FAN MUST BE INSTALLED WITH AN ISOLATING WALL CONTROL/SWITCH.

WARNING: This product is designed to use only those parts supplied with this product and/or accessories designated specifically for use with this product. Using parts and/or accessories not designated for use with this product could result in personal injury or property damage.

WARNING: To reduce the risk of personal injury, do not bend the blade bracket (flange or blade holder) when installing the brackets, balancing the blades, or cleaning the fan. Do not insert foreign objects in between rotating fan blades.

WARNING: All set screws must be checked and retightened where necessary before installation.

WARNING: (a) A lubricant should not be used on the single mounting screw; and (b) The pilot hole should be drilled no larger than the minor diameter of the mounting screw threads, and at least 38mm (1½ inches) of the threaded part of the mounting screw should be secured into a structural wood joist to provide secure mounting.

LIMITED LIFETIME WARRANTY

Extends to the original purchaser of a Fanimation Fan

1. LIMITED LIFETIME MOTOR WARRANTY - If any part of your fan motor fails, due to a defect in materials or workmanship during the lifetime of the original purchaser, Fanimation will provide the replacement part free of charge, when the defective fan is returned to our national service center. Proof of purchase is required. Customer shall be responsible for all costs incurred in the removal or reinstallation and shipping of the product for repairs or replacement.
2. ONE YEAR MOTOR LABOR WARRANTY - If your fan motor fails at any time within one year from the original purchase, due to defects in materials or workmanship, labor to repair the motor will be provided free of charge at our national service center. Purchaser will be responsible for labor charges after this one-year period. Customer shall be responsible for all costs incurred in the removal or reinstallation and shipping of the product for repairs or replacement.
3. If any other part of your fan fails at any time within one year after original purchase, due to a defect in materials or workmanship, we will repair, or replace, at our option, the defective part free of charge for parts and labor performed at our national service center.
4. Because of varying climate conditions, this warranty does not cover changes in the finish, including rusting, pitting, corroding, tarnishing, or peeling.
5. This warranty is void and does not apply to damage from improper installation, neglect, accident, misuse, exposure to extremes of heat or humidity, or as a result of any modification to the original product.
6. All costs of removal and reinstallation of the fan are the sole responsibility of the owner of the fan and not the store that sold the fan or Fanimation.
7. Fanimation reserves the right to modify or discontinue any product at any time and may substitute any part under this warranty.
8. Under no circumstances may a fan be returned without prior authorization from Fanimation. The receipt of purchase must accompany authorized returns and must be sent freight prepaid to Fanimation. The fan to be returned must be properly packed to avoid damage in transit; Fanimation will not be responsible for any damage resulting from improper packaging.
9. It is understood that any repair or replacement is the exclusive remedy available from Fanimation. There is no other expressed or implied warranty. Fanimation hereby disclaims any and all implied warranties, including, but not limited to those of merchantability and fitness for a particular purpose to the extent permitted by law. Some states do not allow limitations on implied warranties. Fanimation will not be liable for incidental, consequential, or special damages arising out of or in conjunction with product use or performance, except as may otherwise be accorded by law. This warranty gives you special legal rights and you may also have other rights that vary from state to state.
10. A certain amount of wobble is normal and should not be considered a problem or a defect.

Table of Contents

Unpacking Instructions 3
Electrical and Structural Requirements 4
How to Assemble Your Ceiling Fan 4
How to Hang Your Ceiling Fan 5
How to Wire Your Ceiling Fan – Rotary Switch 7
How to Wire Your Ceiling Fan – CW110 Wall Control 7
Installing the Canopy Housing 8
Operating Instructions – Rotary Switch 8
Operating Instructions – CW110 Wall Control 9
Maintenance 9
Trouble Shooting 9
Parts List 10
Exploded-View Illustration 11

This Manual is Designed to Make it as Easy as Possible for You to Assemble, Install, Operate, and Maintain Your Ceiling Fan

Tools Needed for Assembly

- One Phillips head screwdriver
- One stepladder
- One ¼″ blade screwdriver
- 7⁄16″ Socket head wrench
- One wire stripper

⚠ WARNING

Before assembling your ceiling fan, refer to section on proper method of wiring your fan (page 4). If you feel you do not have enough wiring knowledge or experience, have your fan installed by a licensed electrician.

Materials

Wiring outlet box and box connectors must be of type required by local code. The minimum wire would be a 3-conductor (2-wire with ground) of the following size:

Installed Wire Length	Wire Size A.W.G.
Up to 50 ft.	14
50 - 100 ft.	12

NOTE: *Place the parts from the loose parts bags in a small container to keep them from being lost. If any parts are missing, contact your local retailer.*

Unpacking Instructions

For your convenience, check-off each step. As each step is completed, place a check mark. This will ensure that all steps have been completed and will be helpful in finding your place should you be interrupted.

⚠ WARNING

Do not install or use fan if any part is damaged or missing. This product is designed to use only those parts supplied with this product and/or any accessories designated specifically for use with this product by Fanimation. Substitution of parts or accessories not designated for use with this product by Fanimation could result in personal injury or property damage. Contact your retail store for missing or damaged parts.

NOTE: *If you are uncertain of part description, refer to exploded view illustration. (Figure 1, page 11)*

Check to see that you have received the following parts:

- Ceiling Fan assembly
- Downrod assembly
- Ceiling Canopy
- Hanger Bracket assembly
- Motor Coupling Cover
- CW110 Wall Control
- Hardware bag:
  - Four wire connectors
  - 7/16″ wrench
  - ⅜″ x 5″ lag bolt with Flat Washer
  - Phillips screwdriver, 1½″
- Support Cable bag:
  - Ceiling Support Cable
  - Cable Clamp
  - ⅜″ x 2″ lag bolt
  - ⅜″ flat washer

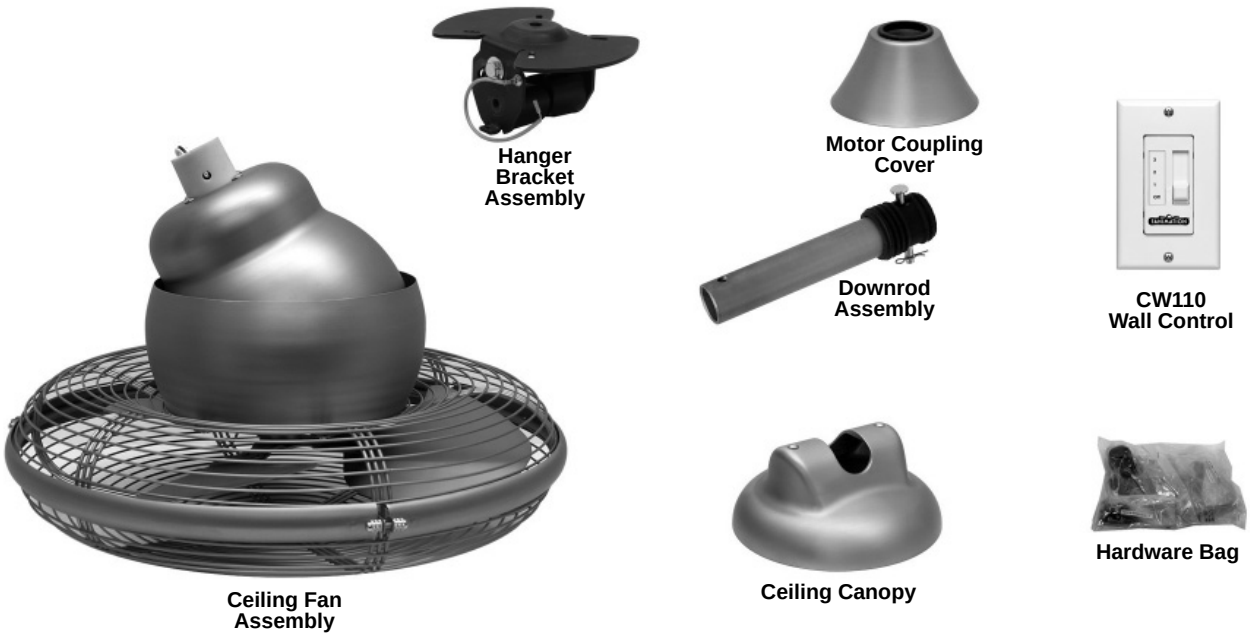

NOTE: *The illustration shown is not to scale or its actual configuration may vary. Wires partially removed for clarity.*

Electrical and Structural Requirements

Your new ceiling fan will require a grounded electrical supply line of 120 volts AC, 60 Hz, 15 amp circuit. The outlet box must be securely anchored and capable of withstanding a load of at least 50 lbs. Figure 1 depicts different structural configurations that may be used for mounting the outlet box.

⚠ WARNING

Turning off wall switch is not sufficient. To avoid possible electrical shock, be sure electricity is turned off at the main fuse box before wiring. All wiring must be in accordance with National and Local codes and the ceiling fan must be properly grounded as a precaution against possible electrical shock.

⚠ WARNING

To avoid fire or shock, follow all wiring instructions carefully. Any electrical work not described in these instructions should be done or approved by a licensed electrician.

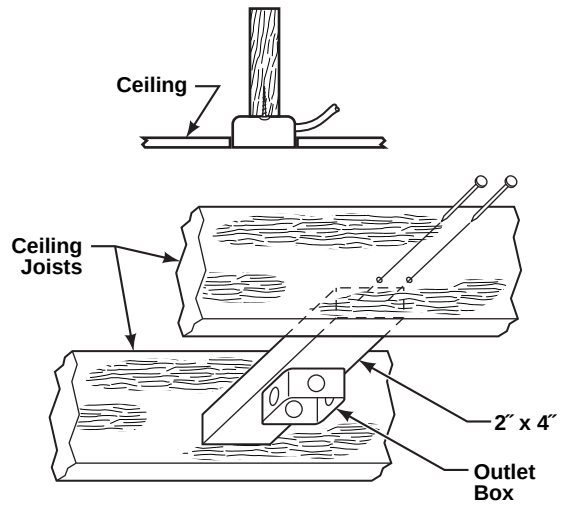

Figure 1

How to Assemble Your Ceiling Fan

1. To prevent damage to housing and/or blade, leave the Ceiling Fan Assembly in its original packing during installation of down rod, motor coupling cover and ceiling canopy.

NOTE: *Do not set Ceiling Fan Assembly on floor or hard surface.*

2. Prior to assembly, set aside and save the hardware bag(s) packed in the packing.

NOTE: *If using a downrod other than what is supplied with the fan, you must remove rubber sleeve from 6″ downrod and put on new downrod.*

3. The fan comes with black, white, green 80″ wires and support cable. Separate and untwist the wires. Route the wires and support cable through the downrod with rubber sleeve.

4. Be sure to line up the holes while pushing the downrod with rubber sleeve into the downrod support prior to installing clevis pin and hairpin clip. (Figure 1 & Figure 2)

⚠ WARNING

It is critical that the clevis pin in the downrod support is properly installed. Failure to verify that the pin and hairpin clip are properly installed could result in the fan falling.

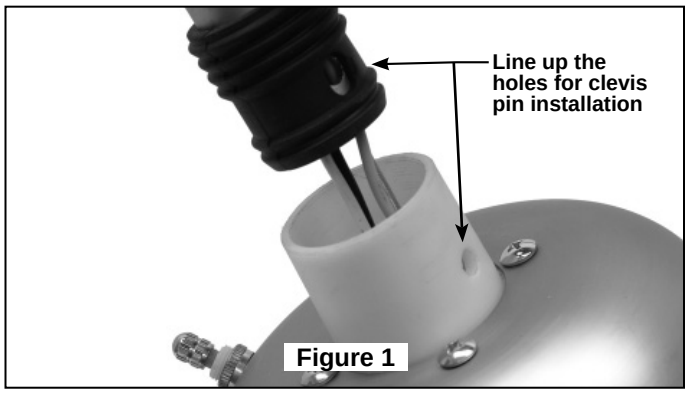

Figure 1

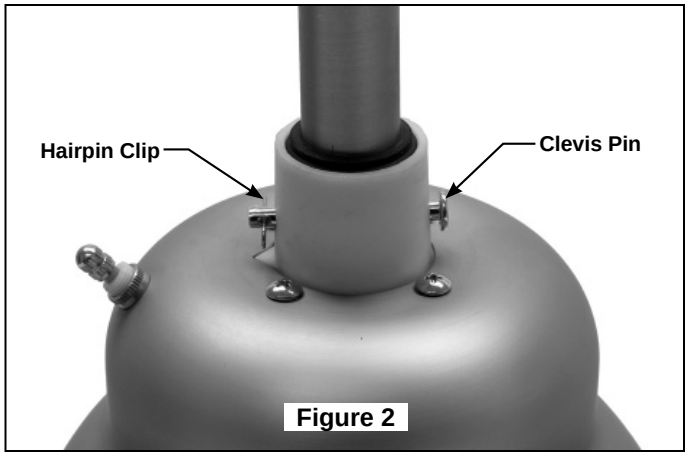

Figure 2

How to Assemble Your Ceiling Fan (cont'd)

5. Disassembly the hanger bracket and ceiling canopy. (Figure 3)

6. Slide the motor coupling cover down until it touches the top of the motor and assemble ceiling canopy as shown. (Figure 4)

7. Before installing fan, measure up approximately 6-9 inches above top of downrod. Cut off excess wire and strip back insulation ½" from each end of wire.

8. You have now completed the assembly of your new ceiling fan. You can now proceed with the hanging and the electrical wiring of your fan.

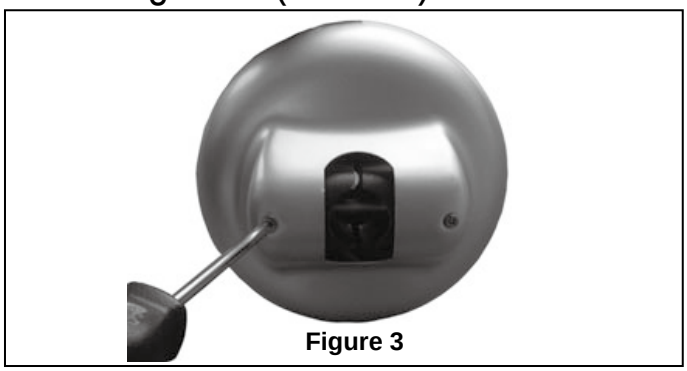

Figure 3

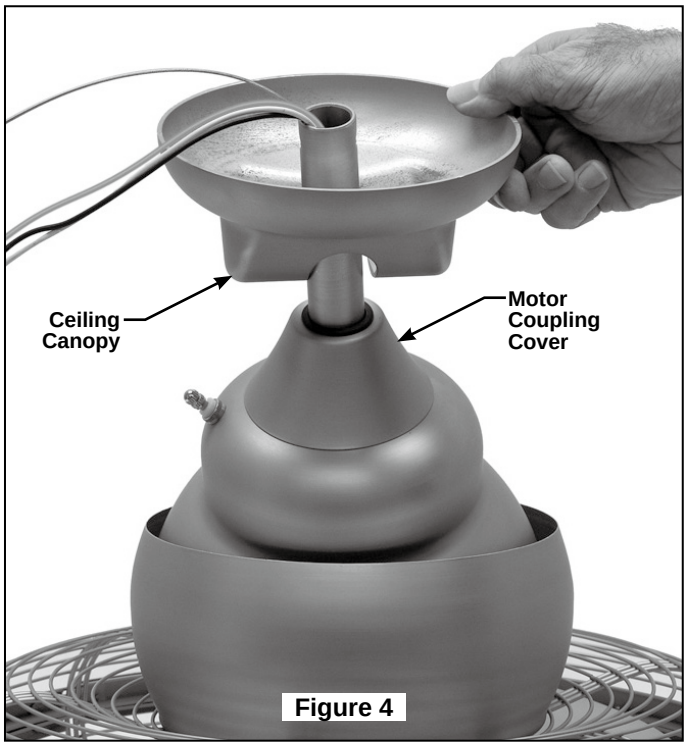

Figure 4

How to Hang Your Ceiling Fan

⚠ WARNING

To avoid possible electrical shock, be sure electricity is turned off at the main fuse box before hanging.
NOTE: If you are not sure if the outlet box is grounded, contact a licensed electrician for advice, as it must be grounded for safe operation.

⚠ WARNING

The fan must be hung with at least 7´ of clearance from floor to blade and MUST ONLY be hung in a vertical downward position from ceiling. (Figure 1)

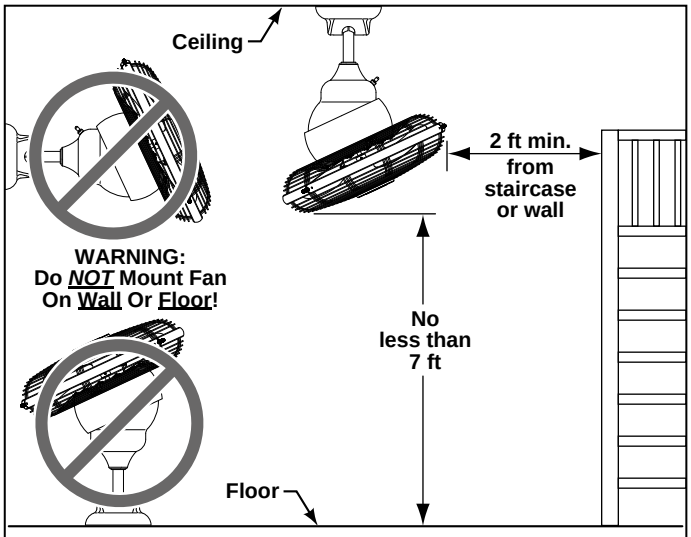

Figure 1

How to Hang Your Ceiling Fan (cont'd)

CAUTION

To Reduce the Risk of Personal Injury, this Product Must be Secured as Described in the Manual.

1. Attaching Ceiling Support Cable (Figure 2): Drill ¼″ pilot hole through into the ceiling joist or structural member. Securely attach the ceiling support cable with ⅜″ x 2″ lag bolt and flat washer.

NOTE: *Ceiling support cable must be directly secured to ceiling joist or structural member between flat washer and junction box with 2″ lag bolt (Figure 2).*

2. Hanger Bracket Attachment (Figure 2): Drill ¼″ pilot hole through the center of the junction box, into the ceiling joist or structural member. Attach hanger bracket to the ceiling structure using ⅜″ x 5″ lag bolt and flat washer**.**

3. Assemble and secure the assembled fan with hex-head bolt, two lockwashers, nylon locknut and clevis pin. (Figure 3)

⚠ WARNING

It is critical that the clevis pin and lock nut in the hanger bracket/downrod area is properly installed. Failure to verify that the nut and hairpin clip are properly installed could result in the fan falling.

INSTALLATION NOTE

The hanger bracket angle adjustment MUST ONLY be used to orientate the downrod in a vertical downward position.

4. (Optional) Sloped Ceiling Installation (Figure 4): Loosen two nuts located on both sides of the hanger bracket to orientate the downrod in the vertical position.

5. Make sure the electrical supply wires, including the hanger bracket grounding wire and safety cable are pulled through the downrod, between the hanger bracket and the junction box so that electrical connections can be made later.

6. Attach the safety cable to ceiling support cable. Slide cable clamp onto safety cable (from fan). Place the end of cable through the loop of ceiling support cable. Pull as much cable through loop as possible. Feed end of cable into clamp hole and firmly tighten screw (Figure 5). Cut off excess safety cable.

⚠ WARNING

To avoid possible shock, do not pinch wires between the downrod and the hanger bracket.

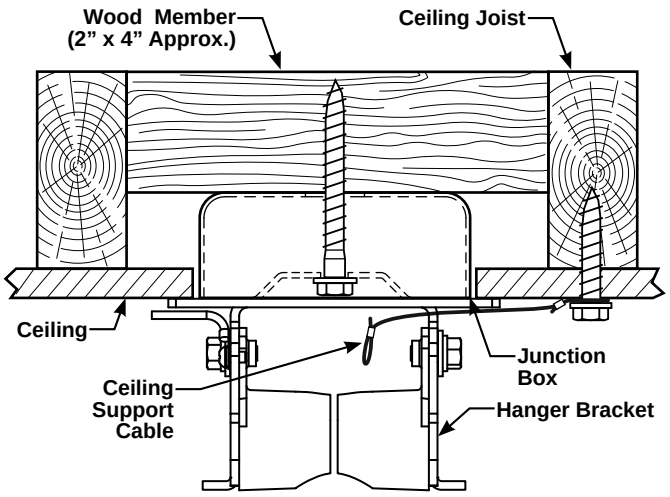

Figure 2

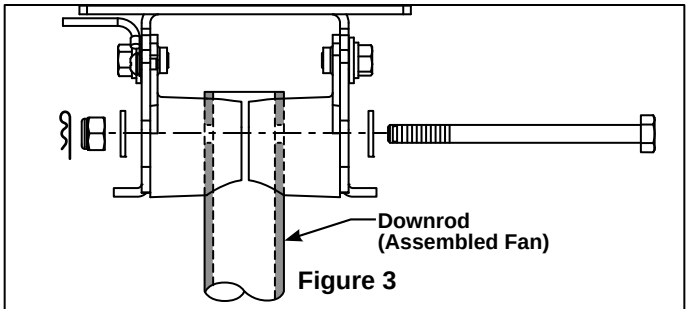

Figure 3

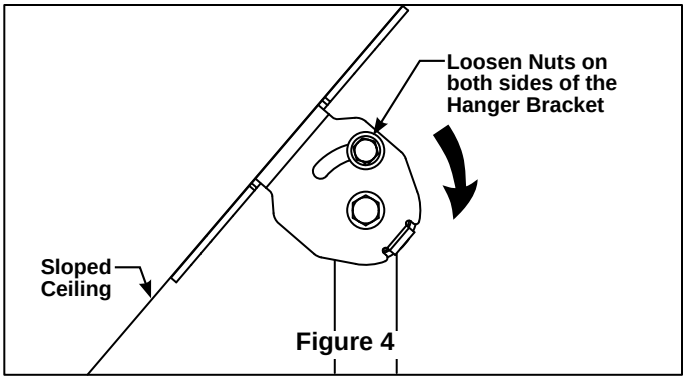

Figure 4

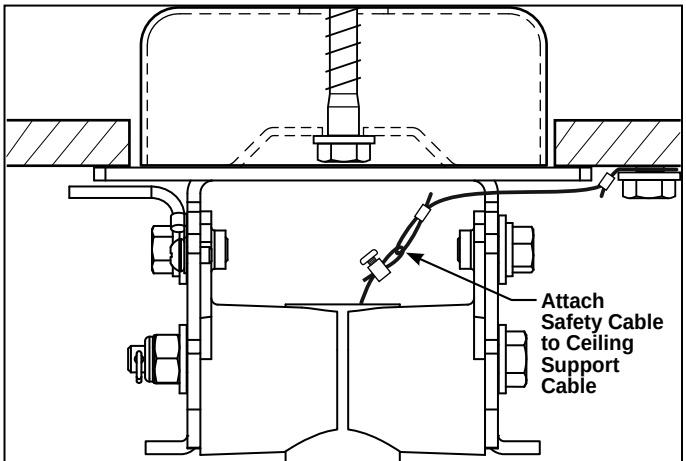

NOTE: *Supply wires and fan wires omitted for clarity*

Figure 5

How to Wire Your Ceiling Fan – Rotary Switch

If you feel that you do not have enough electrical wiring knowledge or experience, have your fan installed by a licensed electrician.

⚠ WARNING

To avoid possible electrical shock, be sure electricity is turned off at the main fuse box before wiring.
NOTE: If you are not sure if the outlet box is grounded, contact a licensed electrician for advice, as it must be grounded for safe operation.

1. Run the black, white and green wires through the wiring hole in the side of the hanger bracket to allow for electrical connections.

2. Connect the green grounding wire from the fan and hanger bracket to the grounding wire from the outlet box (this may be a bare wire or a wire with green insulation). Securely connect these wires with wire connector supplied with your fan.

3. Securely connect the white wire from the fan motor to the white supply (neutral) wire using wire connector supplied (Figure 1).

4. Securely connect the black fan motor wire to the black supply wire using wire connector supplied (Figure 1).

5. After connections have been made, turn leads upward and carefully push leads into the outlet box, with the white and green leads to one side of the box and the black leads towards the other side.

NOTE: *If fan or supply wires are different colors than indicated, have this unit installed by a qualified electrician.*

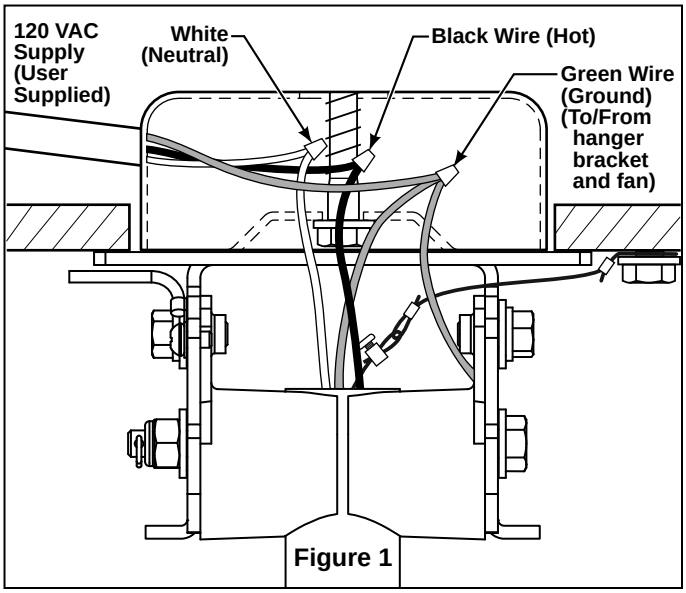

Figure 1

6. The wires should be spread apart with the grounded conductor and the equipment-grounding conductor on one side of the outlet box and the ungrounded conductor on the other side of the outlet box.

How to Wire Your Ceiling Fan – CW110 Wall Control

If you feel that you do not have enough electrical wiring knowledge or experience, have your fan installed by a licensed electrician.

⚠ WARNING

To avoid possible electrical shock, be sure electricity is turned off at the main fuse box before wiring.
NOTE: If you are not sure if the outlet box is grounded, contact a licensed electrician for advice, as it must be grounded for safe operation.

1. Installing Wall Control (Figures 1 & 2):
• With electrical power still disconnected, remove the existing wall plate and switch.
• Make wiring connections with wire nuts as shown in Figure 1.
– One black wire from wall control unit to black (hot supply).
– One black wire from wall control unit to black wire leading to ceiling outlet box.
– One green wire from wall control unit to ground wire leading to ceiling outlet box.

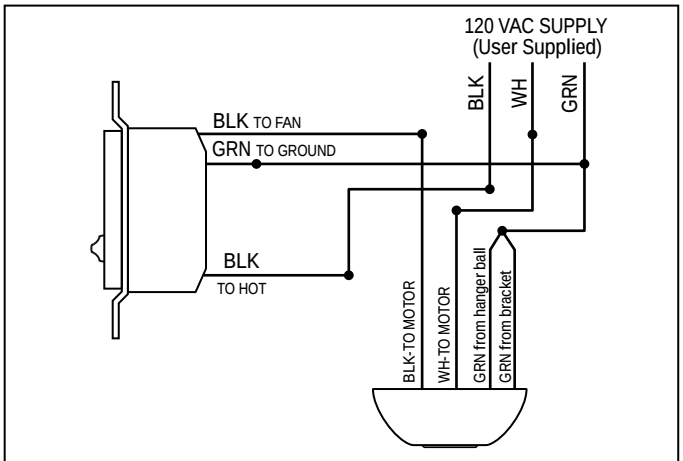

Figure 1

How to Wire Your Ceiling Fan – CW110 Wall Control (cont'd)

• Attach wall control unit to outlet box using the two 6-32 screws provided.
• Attach wall plate to the switch control front using the two small screws provided.

⚠ WARNING

Check to see that all connections are tight, including ground, and that no bare wire is visible at the wire connectors, except for the ground wire. Do not operate fan until the blades are in place. Noise and fan damage could result.

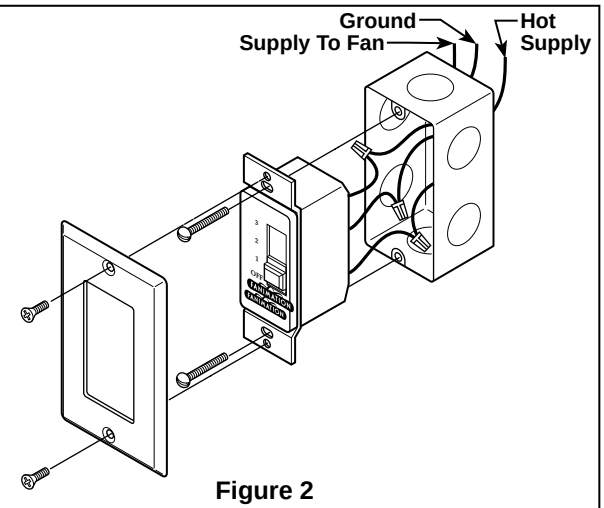

Figure 2

Installing the Canopy Housing

NOTE: *This step is applicable after the necessary wiring is completed.*

⚠ WARNING

To avoid possible fire or shock, make sure that the electrical wires are completely inside the canopy housing and not pinched between the housing and the ceiling.

1. Securely attach the Canopy Housing to the Hanger Bracket using the two screws supplied with your fan (Figure 1)

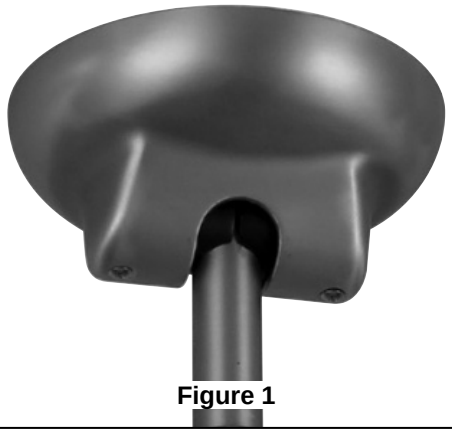

Figure 1

Operating Instructions – Rotary Switch

⚠ WARNING

Check to see that all connections are tight, including ground, and that no bare wire is visible at the wire connectors, except for the ground wire. Do not operate fan until the blades is in place. Noise and fan damage could result.

1. Select the desired airflow located on the fan motor assembly by rotating clockwise. (Figure 1)

• 1st position – high fan speed
• 2nd position – medium fan speed
• 3rd position – low fan speed
• 4th position – fan off

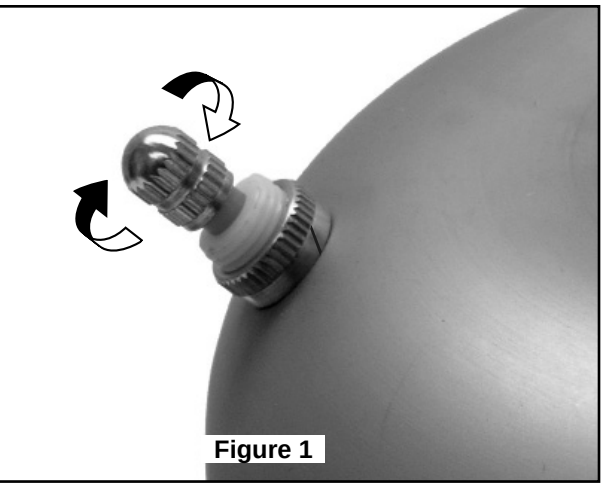

Figure 1

Operating Instructions - CW110 Wall Control

1. Restore electrical power to the outlet box by turning the electricity on at the main fuse box.

2. *NOTE:* *Set the rotary switch to High speed before using the wall control.*
The operating sequence is as follows:

- 4th Position = low speed
- 3rd Position = medium speed
- 2nd Position = high speed
- 1st Position = fan off

Figure 1

Maintenance

Periodic cleaning of your new ceiling fan is the only maintenance that is needed. When cleaning, use only a soft brush or lint free cloth to avoid scratching the finish. Abrasive and/or non-abrasive cleaning agents are not required and should be avoided to prevent damage to finish.

CAUTION

Do not use water when cleaning your ceiling fan. It could damage the motor or the finish and create the possibility of electrical shock.

Trouble Shooting

⚠ WARNING

For your own safety turn off power at fuse box or circuit breaker before trouble shooting your fan.

Trouble	Probable Cause	Suggested Remedy
1. FAN WILL NOT START	**1.** Fuse or circuit breaker blown. **2.** Loose power line connections to the fan, or loose switch wire connections in the switch housing.	**1.** Check main and branch circuit fuses or circuit breakers. **2.** Check line wire connections to fan and switch wire connections in the switch housings. **CAUTION: Make sure main power is turned off !**
2. FAN SOUNDS NOISY	**1.** Motor noise caused by solid state variable speed control.	**1.** Some fan motors are sensitive to signals from solid-state variable speed controls. Solid-state controls are not recommended, choose an alternative control method.
3. FAN WOBBLES EXCESSIVELY	**1.** Clevis nut in hanger bracket/downrod is loose.	**1.** Tighten clevis nut securely in hanger bracket/ downrod support.

Parts List

Model #OF110**

Ref. #	Description	Part #
1	Hanger Bracket with mounting hardware	AP1160BL
2	Downrod with Clevis Pin, Hairpin Clip & Rubber Sleeve	ADR110**
3	Ceiling Canopy	P1163**
4	Motor Coupling Cover	AP1115**
5	Fan Motor Assembly	AMA110**
6	Wall Control	CW110
7	*Hardware Bag Containing:*	HDWOF110**
	7/16” Wrench (2)	
	⅜” x 5” Lag Bolt with Flat Washer	
	1½” Phillips Screwdriver	
	Wire Connectors (4)	
	Support Cable Bag Containing:	
	Ceiling Support Cable with Cable Clamp	
	⅜” x 2” Lag Bolt	
	Flat Washer	

***Insert FINISH CODES (Refer to fan model number located on downrod support)*

Before discarding packaging materials, be certain all parts have been removed

How To Order Parts

When ordering repair parts, always give the following information:

- Part Number
- Part Description
- Fan Model Number

Contact your retail store for repair parts.

The Extraordinaire™

Exploded-View

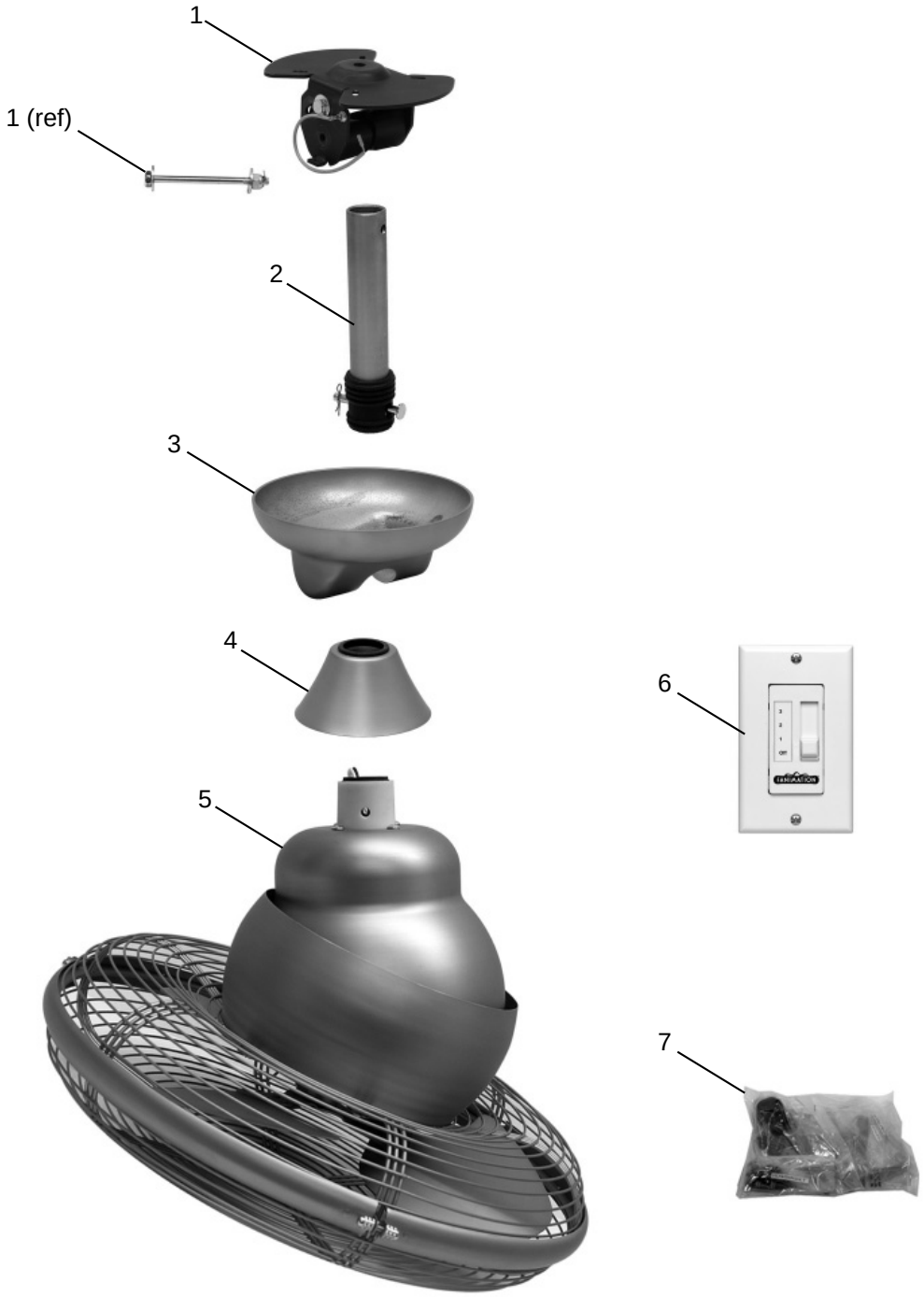

NOTE: *The illustration shown is not to scale or its actual configuration may vary.*
Wires partially removed for clarity.

Figure 1

10983 Bennett Parkway
Zionsville, IN 46077
Toll Free (888) 567-2055
FAX (866) 482-5215
Outside U.S. call (317) 733-4113
Visit Our Website @ www.fanimation.com

Copyright 2009 Fanimation

2009/08