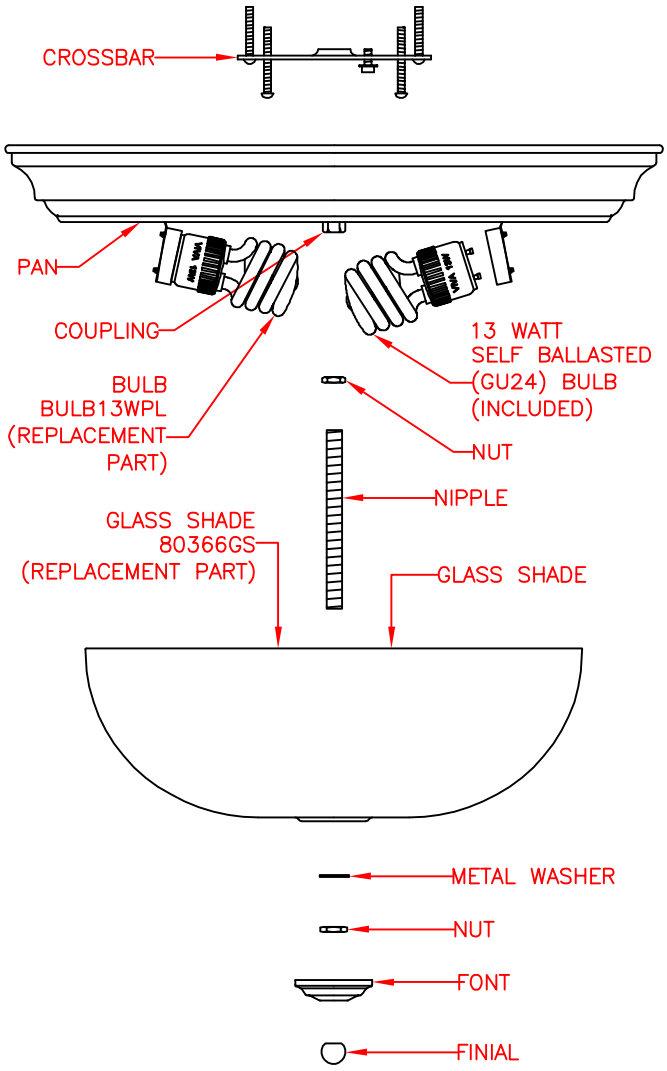

AVAILABLE PARTS ARE:
80366GS (GLASS SHADE)
BULB13WPL (BULB)

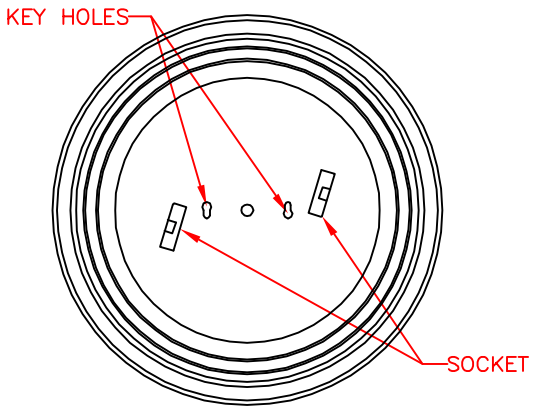

PAN DETAILS

PRODUCT SPECIFICATIONS

- ☐ **OVERALL ASSEMBLED DIMENSIONS** HEIGHT: 14.6 CM (5–3/4"), WIDTH: 33.6 CM (13–1/4") DIA.
- ☐ **2 LIGHTS:** UL LISTED. 13 WATT. PHENOLIC GU24 SOCKET.
- ☐ **GLASS SHADE:** PAINTED WHITE GLASS SHADE, 25 CM (9–7/8") DIA. x 8.7 CM (3–3/8") HEIGHT. SHAPED AS SHOWN.
- ☐ **PAN:** PLATED METAL, 33.6 CM (13–1/4") DIA. x 3.8 CM (1–1/2") HEIGHT.
- ☐ **FONT:** PLATED METAL, 4.5 CM (1–3/4") DIA. x 1.2 CM (1/2") HEIGHT.
- ☐ **SUPPLY WIRE:** UL LISTED. 18 AWG, 105°, MUST EXTEND A MINIMUM OF 15.2 (6") PAST HOLES OF PAN. WIRES MUST BE LEAD FREE.
- ☐ **LABELS:** UL AND CSA OR CUL, MANUFACTURING DATE, MODEL # AND COUNTRY OF ORIGIN LABELS PROVIDED ON INSIDE OF PAN. RELAMPING LABEL FOR 13 WATT TYPE "CFS/GU24" BULB PROVIDED NEAR SOCKET. RELAMPING LABELS ARE NOT ALLOWED TO BE PLACED ON THE OUTSIDE OF THE PRODUCT.

PACKAGING AND SHIPPING DETAILS

- ☐ THE GLASS SHADE AND PAN ARE DISASSEMBLED FOR SHIPPING. EACH PART IS WRAPPED IN PLASTIC BAG. THE GLASS SHADE IS PLACED IN A SEPARATE CARTON. A SMALL BAG OF SILICA IS PACKED WITH THE PARTS.
- ☐ HARDWARE PACK #004 IS PROVIDED. ALL PARTS SHOULD BE SECURED SO THEY CAN NOT MOVE DURING SHIPPING.
- ☐ THE CARTON IS MADE OF DOUBLE WALL, CORRUGATED CARDBOARD "A MA A". BROWN IN COLOR. THE INNER PACKING IS DIE–CUT CARDBOARD OR STYROFOAM TO PROTECT AND SECURE THE LAMP AND MUST PASS THE FEDEX DROP TEST REQUIREMENTS.
- ☐ EACH MASTER CARTON SHALL BE PRINTED WITH A ENERGY STAR LOGO.
- ☐ EACH CARTON SHALL BE PRINTED WITH A LINE DRAWING AND THE KENROY HOME NAME AND LOGO, MODEL NUMBER, SKU NUMBER AND FINISH, EACH CARTON SHALL BE PROVIDED A UPC LABEL. THE UPC BAR CODE AS FOLLOWS: BS=053392098483.

OTHER DETAILS

- ☐ ALL VISIBLE PARTS MUST MATCH FIXTURE FINISH UNLESS OTHERWISE SPECIFIED.
- ☐ MODEL 80367BS INSTRUCTIONS ARE TO BE PRINTED CLEARLY ON QUALITY PAPER AND PACKED WITH EACH FIXTURE.
- ☐ ALL BAGS MUST BE LABELED WITH OFFICIAL "THIS BAG IS NOT A TOY" STATEMENT.
- ☐ ASSEMBLY TIME: 5 MINUTES.
- ☐ DIMS OF UNIT BOX: 36.2 CM (14–1/4") LENGTH x 36.2 CM (14–1/4") WIDTH x 15.9 CM (6–1/4") HEIGHT.
- ☐ DIMS OF MASTER BOX: 74.9 CM (29–1/2") LENGTH x 38.1 CM (15") WIDTH x 52.1 CM (20–1/2") HEIGHT. (6 PCS/CTN)
- ☐ NET WEIGHT (UNIT): 3.3 LBS. GROSS WEIGHT (UNIT): 5 LBS.
- ☐ NET WEIGHT (MASTER): 19.8 LBS. GROSS WEIGHT (MASTER): 31.4 LBS. (6 PCS/CTN)
- ☐ THE UL NUMBER IS E127808.

KENROY HOME
11660 CENTRAL PARKWAY
JACKSONVILLE, FL. 32224
PHONE: 904–642–4340
FAX: 904–642–4150

THIS DOCUMENT AND THE INFORMATION THAT IT DISCLOSES IS THE EXCLUSIVE PROPERTY OF KENROY HOME. ANY REPRODUCTION OR USE OF THIS DRAWING IN PART OR IN WHOLE, WITHOUT THE EXPRESS CONSENT OF THE PROPRIETOR IS PROHIBITED. © 2008 KENROY HOME.

DATE: 7/14/2008	SCALE: NONE	DRAWN BY: JAMES	REVISION DATE:	MODEL #: 80367
REFERENCE: TRIOMPHE 2LT. MEDIUM FLUSHMOUNT (CFL)		APPROVAL:	REVISION DATE:	FINISH: BS
			REVISION DATE:	PAGE: 1 OF: 1