4” CENTERSET GOOSENECK METERING

Z866A0-XL

TAG _____

Engineering Specifications: Zurn AquaSpec® Z866A0-XL
Polished chrome-plated cast brass faucet body with integral shanks, slow-closing metering cartridges, a 3-1/2” [89mm] centerline rigid or swing gooseneck spout, and vandal-resistant ADA compliant color-coded metal handles. Easy adjustable cycle time, preset to 10 seconds at 80 PSI. Unit is furnished with a water-conserving aerator which reduces flow to .25 GPC [.95 L] (complying to ANSI A112.18.1 Standard for flow), mounting hardware, 1/2" NPSM coupling nuts for standard lavatory risers and integral shank filters.

Zurn Lead Free products (-XL), is the line of durable, high quality brass faucets and fixtures that are designed and manufactured to comply with state laws and local codes that mandate lead content levels. Zurn Lead Free products (-XL) are manufactured with less than one quarter of one percent (0.25%) total lead content by weighted average.

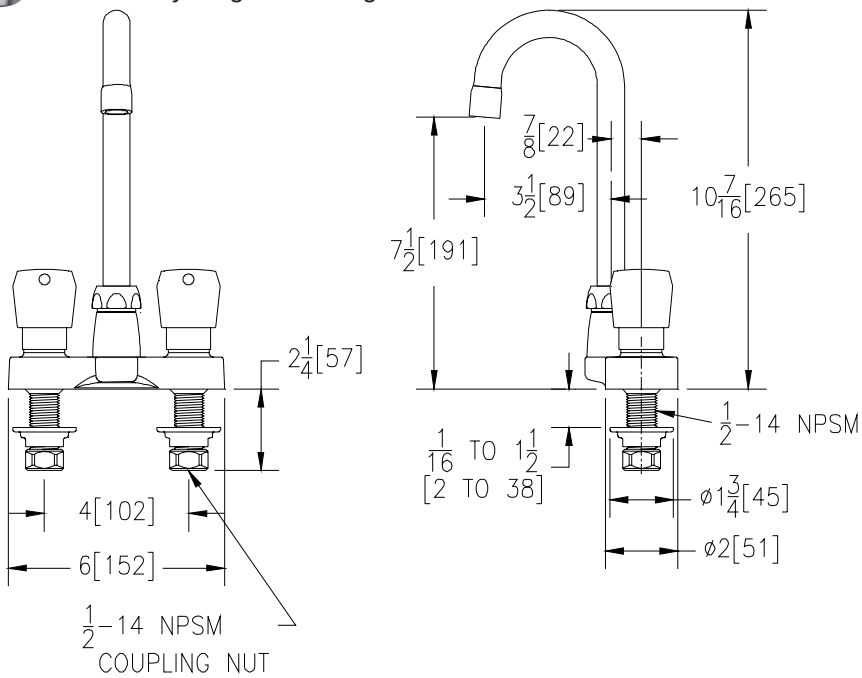

Note: *All dimensions are for reference only. Do not use for pre-plumbing.*

ADA DESIGNED

OPTIONAL ACCESSORIES

Suffix	Description
___-CS	Check Stops
___-FC	2.0 GPM [7.6 L] Laminar Flow Control in Base of Spout
___-G	1-1/4” [32mm] Grid Strainer Drain
___-GH	1-1/4”[32mm] Offset Handicap Grid Drain
___-IN	Institutional Handle - Tamper-Proof and Vandal-Resistant
___-P	1-1/4” [32mm] Pop-up Drain
___-PT	1-1/4" [32mm] Cast Brass P-Trap with a 7-1/2" [191mm] Long 17-Gauge Wall Bend
___-RKR	ADA Compliant Rocker Handle
___-140	140º Restricted Swing Spout
___-3F	0.5 GPM [7.9 L] Vandal-Resistant Pressure Compensating Female Aerator
___-16F	1.0 GPM [3.8 L] Vandal-Resistant Pressure Compensating Female Spray Outlet

ZURN INDUSTRIES, LLC ♦ COMMERCIAL BRASS OPERATION ♦ 2640 SOUTH WORK STREET ♦ FALCONER NY 14733
Phone: 1-716-665-1132 ♦ Fax: 1-716-665-1135 ♦ World Wide Web: www.zurn.com
In Canada: ZURN INDUSTRIES LIMITED ♦ 3544 Nashua Drive ♦ Mississauga, Ontario L4V1L2 ♦ Phone: 905/405-8272 Fax: 905/405-1292

AquaSpec® is a registered trademark of Zurn Industries, LLC
©2009 Zurn Industries, LLC

Rev. Date: 4/30/09 C.N. No. 108711
Dwg. No. 93117 Product No. Z866A0-XL