WIDESPREAD
Z831R1-XL-ICT

TAG _____

Engineering Specifications: Zurn AQUASPEC™ Z831R1-XL-ICT
Polished chrome-plated widespread with adjustable centers from 8" [203mm] to 20" [508mm], a 5" [127mm] centerline cast brass low profile spout and quarter turn ceramic disc cartridges. Unit is furnished with a 2.2 GPM [8.3 L] pressure compensating aerator (complying with ANSI A112.18.1 Standard for flow), 2-1/2" [64mm] vandal-resistant metal lever color-coded handles, mounting hardware and 1/2" NPSM coupling nuts for standard lavatory risers. Widespread accommodates installations up to 1-1/8" [29mm] thick.

Zurn Lead Free products (-XL), is the line of durable, high quality brass faucets and fixtures that are designed and manufactured to comply with state laws and local codes that mandate lead content levels. Zurn Lead Free products (-XL) are manufactured with less than one quarter of one percent (0.25%) total lead content by weighted average.

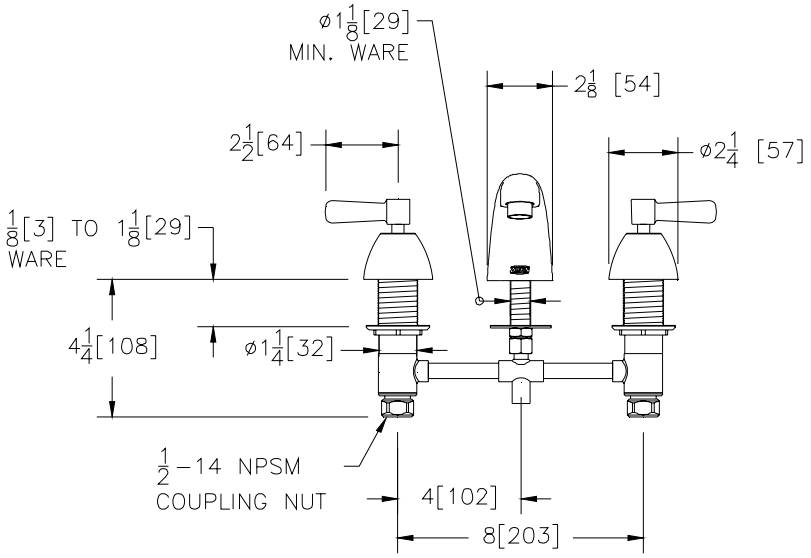

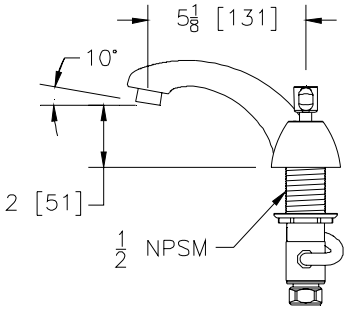

Note: *All dimensions are for reference only. Do not use for pre-plumbing*

ADA DESIGNED

OPTIONAL ACCESSORIES

Suffix	Description
____ -CWO	Cold Water Only
____ -G	1-1/4" [32mm] Grid Strainer Drain
____ -HCT	Hot/Cold Text Indexes
____ -PT	1-1/4"[32mm] Cast Brass P-Trap witha 7-1/2" [191mm] Long 17-Gauge Wall Bend
____ -2M	2.2 GPM [8.3 L] Vandal-Resistant Pressure Compensating Male Aerator
____ -3M	0.5 GPM [1.9 L] Vandal-Resistant Pressure Compensating Male Spray Outlet
____ -4M	2.2 GPM [8.3 L] Vandal-Resistant Pressure Compensating Male Laminar Flow Outlet
____ -7M	1.0 GPM [3.8L] Pressure Compensating Male Spray Outlet
____ -14M	2.5 GPM [9.5 L] Vandal-Resistant Male Aerator
____ -16M	1.0 GPM [3.8L] Vandal-Resistant Pressure Compensating Male Spray Outlet
____ -17M	1.5 GPM [5.7L] Vandal-Resistant Pressure Compensating Male Aerator
____ -18M	1.5 GPM [5.7L] Vandal-Resistant Pressure Compensating Male Laminar Flow
____ -19M	1.5 GPM [5.7 L] Anti-Microbial Pressure Compensating Male Laminar Flow Outlet
____ -20M	1.0 GPM [3.8L] Vandal-Resistant Pressure Compensating Anti-Microbial Male Laminar Flow Outlet
____ -21M	1.0 GPM [3.8L] Male Laminar Flow Outlet
____ -22M	1.0 GPM [3.8L] Vandal-Resistant Male Laminar Flow Outlet

ZURN INDUSTRIES, LLC ♦ COMMERCIAL BRASS OPERATION ♦ 2640 SOUTH WORK STREET ♦ FALCONER NY 14733
Phone: 1-716-665-1132 ♦ Fax: 1-716-665-1135 ♦ World Wide Web: www.zurn.com
In Canada: ZURN INDUSTRIES LIMITED ♦ 3544 Nashua Drive ♦ Mississauga, Ontario L4V1L2 ♦ Phone: 905/405-8272 Fax: 905/405-1292

AquaSpec® is a registered trademark of Zurn Industries, LLC
©2009 Zurn Industries, LLC

Rev. Date: 5/18/09 C.N. No. 108807
Dwg. No. 93204 Product No. Z831R1-XL-ICT