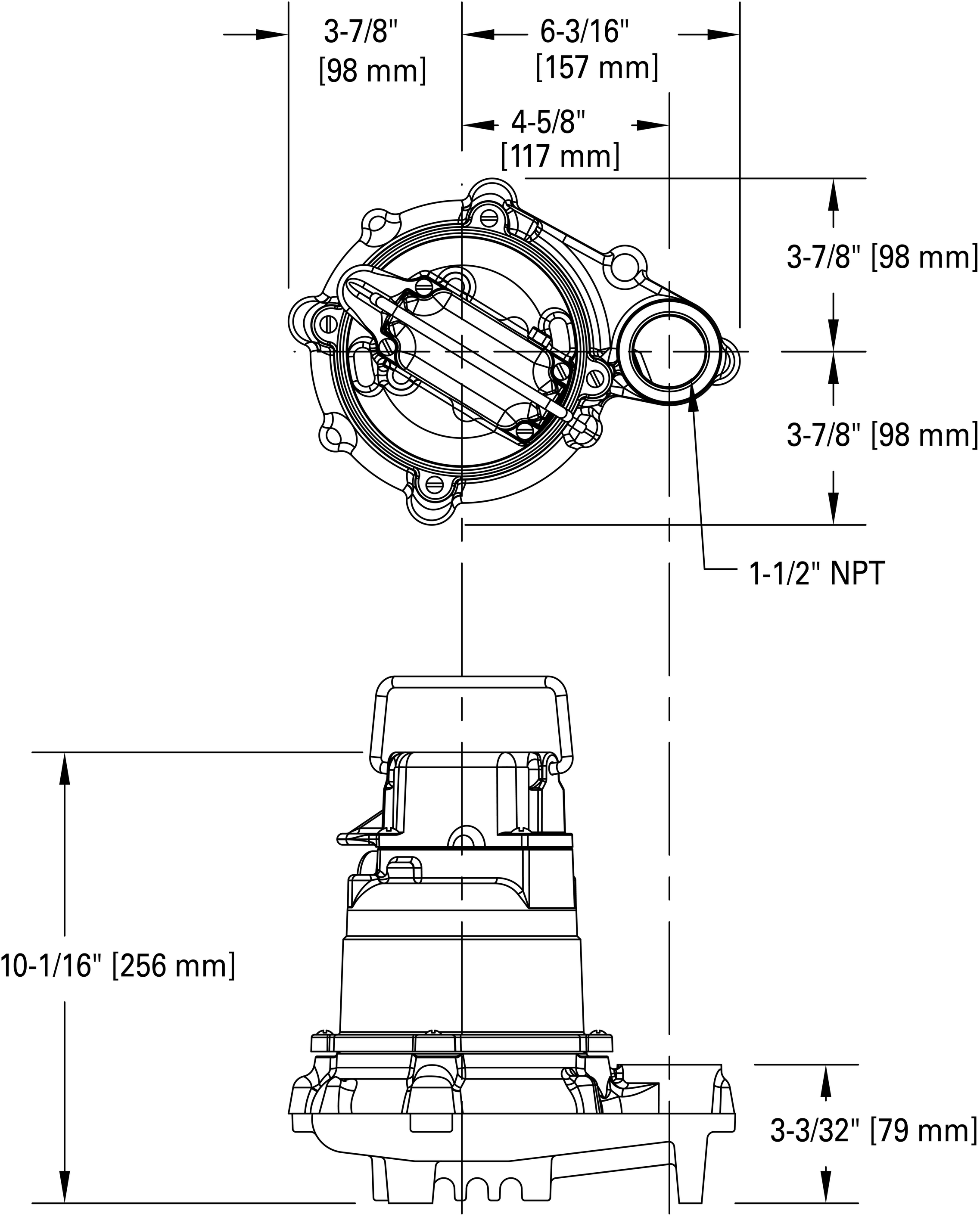
3-7/8"
[98 mm]
6-3/16"
[157 mm]
4-5/8"
[117 mm]
3-7/8" [98 mm]
3-7/8" [98 mm]
1-1/2" NPT
10-1/16" [256 mm]
3-3/32" [79 mm]

SK1015