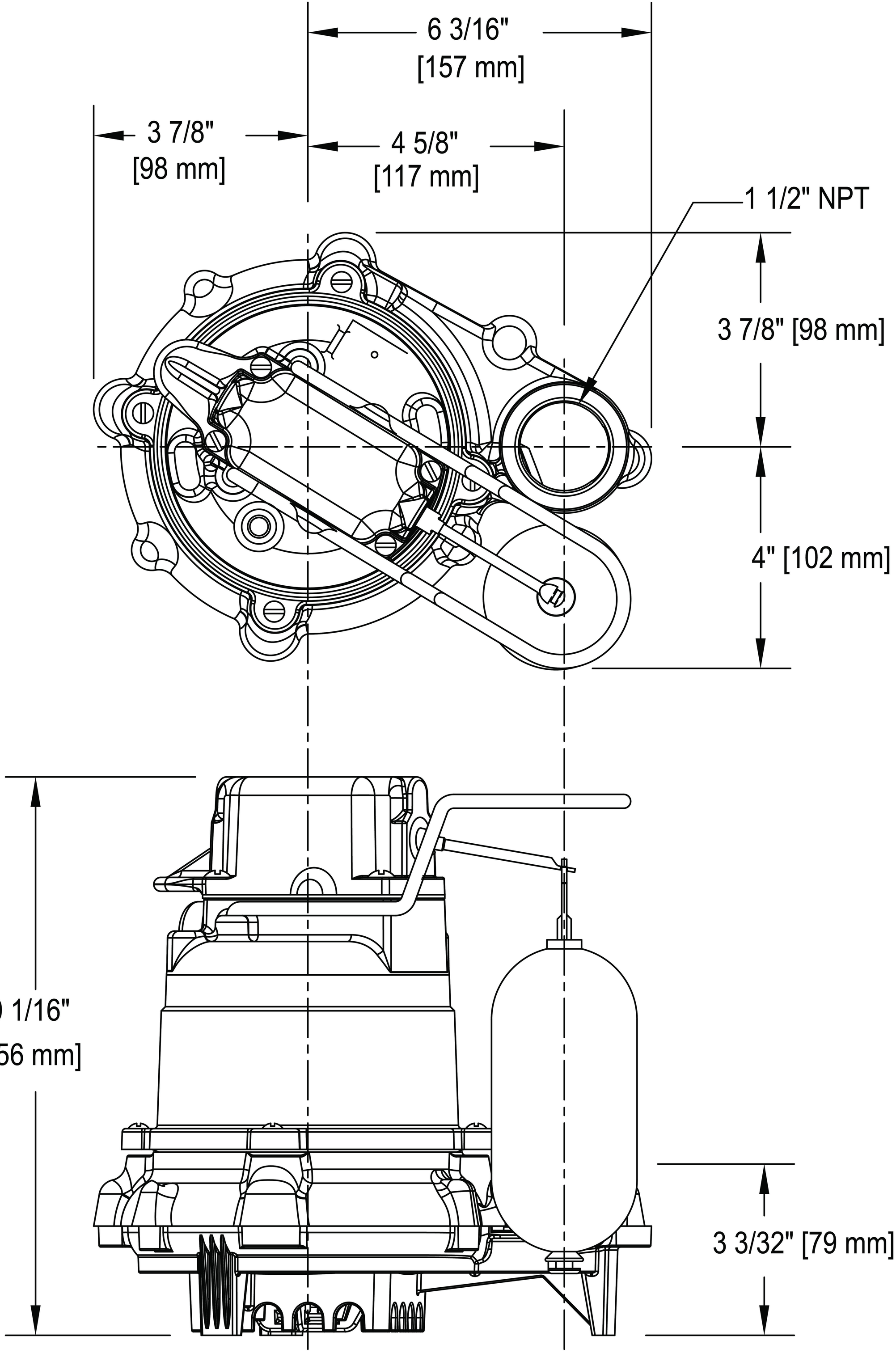
6 3/16"
[157 mm]
3 7/8"
[98 mm]
4 5/8"
[117 mm]
1 1/2" NPT
3 7/8" [98 mm]
4" [102 mm]
10 1/16"
[256 mm]
3 3/32" [79 mm]
SK858