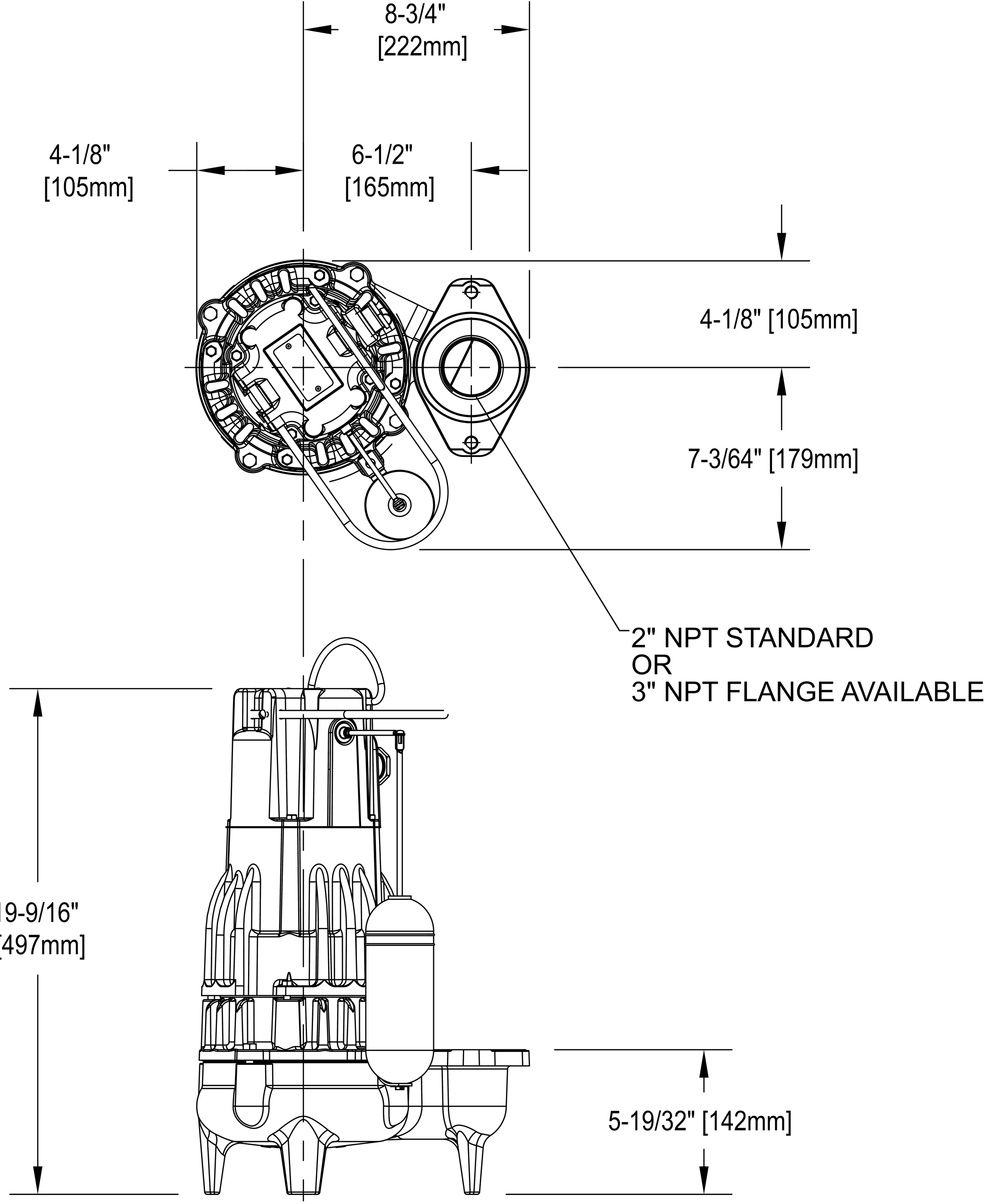
8-3/4"
[222mm]
4-1/8"
[105mm]
6-1/2"
[165mm]
4-1/8" [105mm]
7-3/64" [179mm]
2" NPT STANDARD
OR
3" NPT FLANGE AVAILABLE
19-9/16"
[497mm]
5-19/32" [142mm]

SK863