Undermount Sink Double Bowl
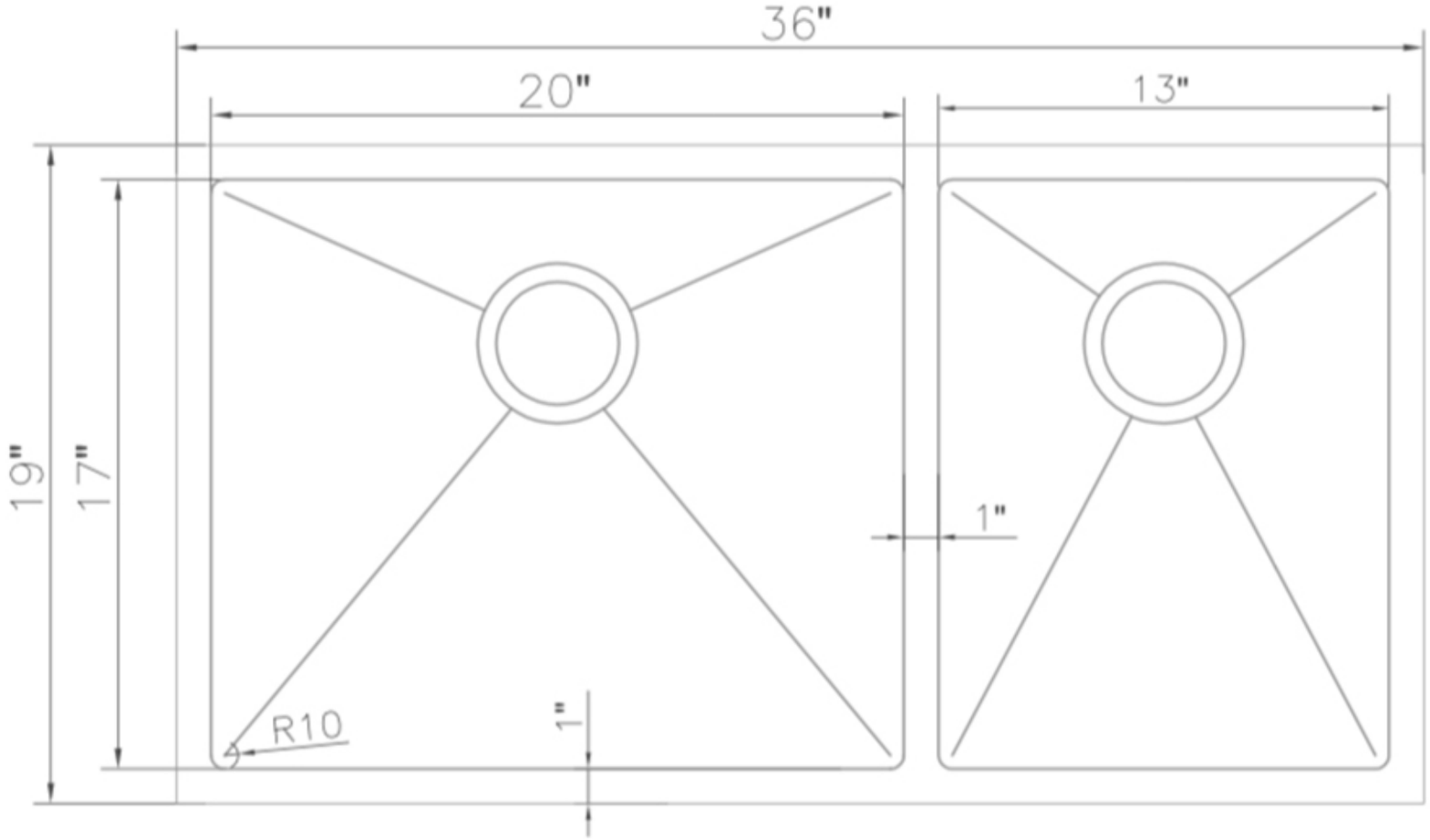
SR60D-36