Undermount Sink Double Bowl
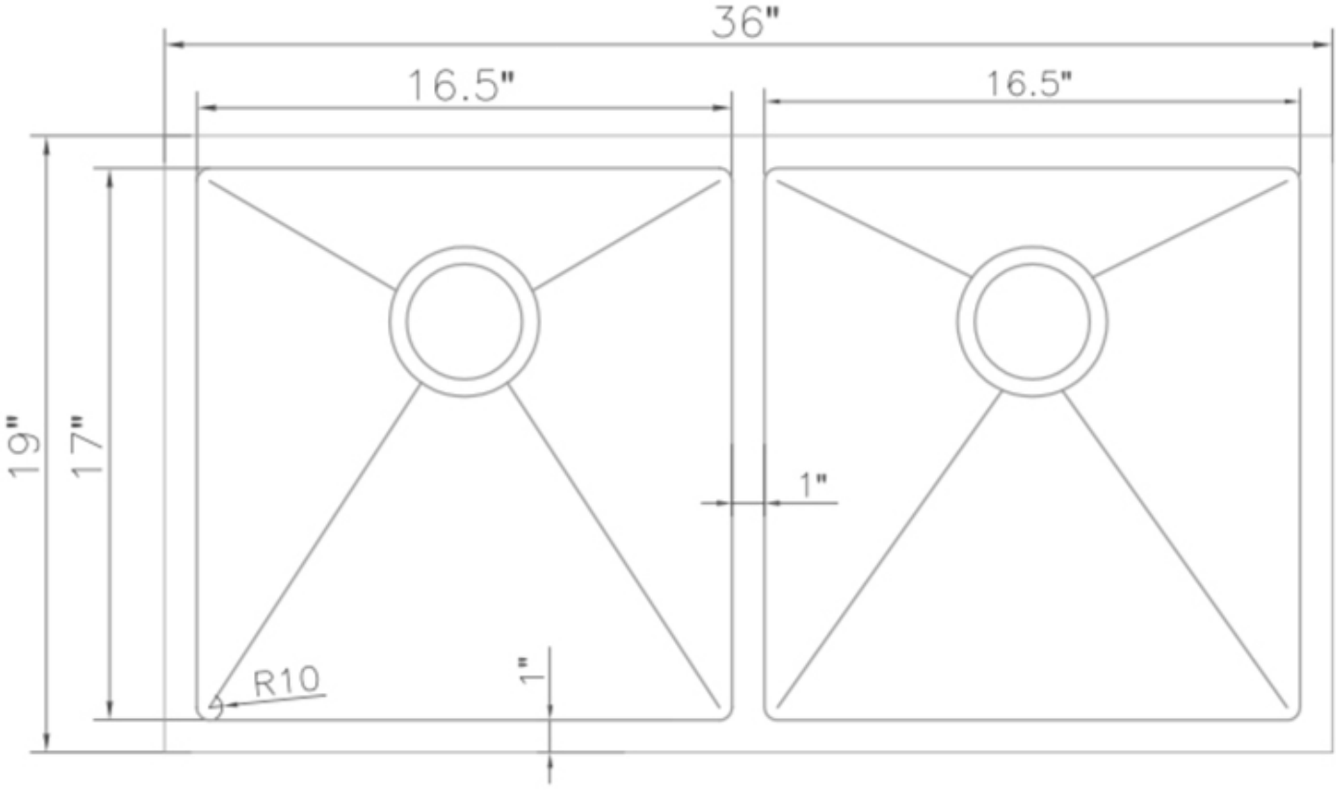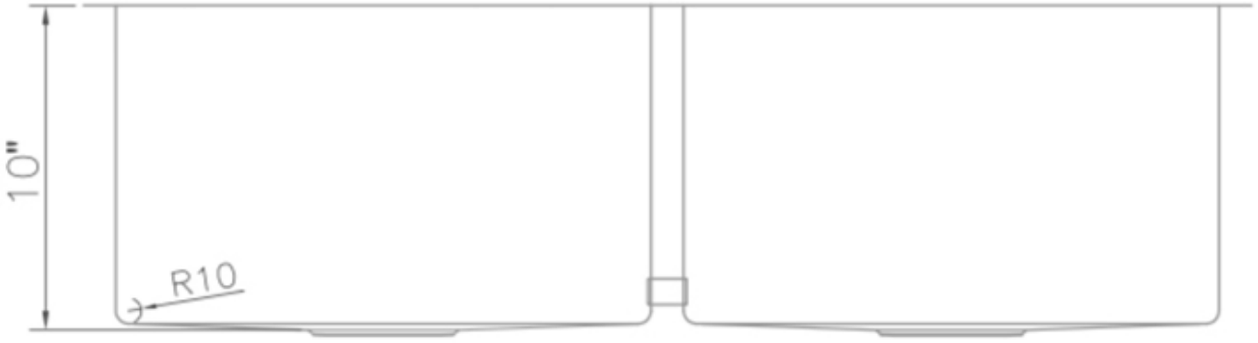
SR50D-36