Product Specs Sheets

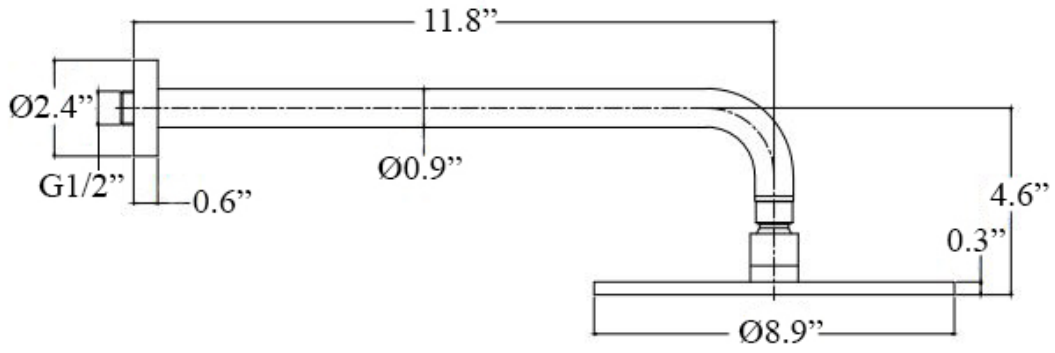

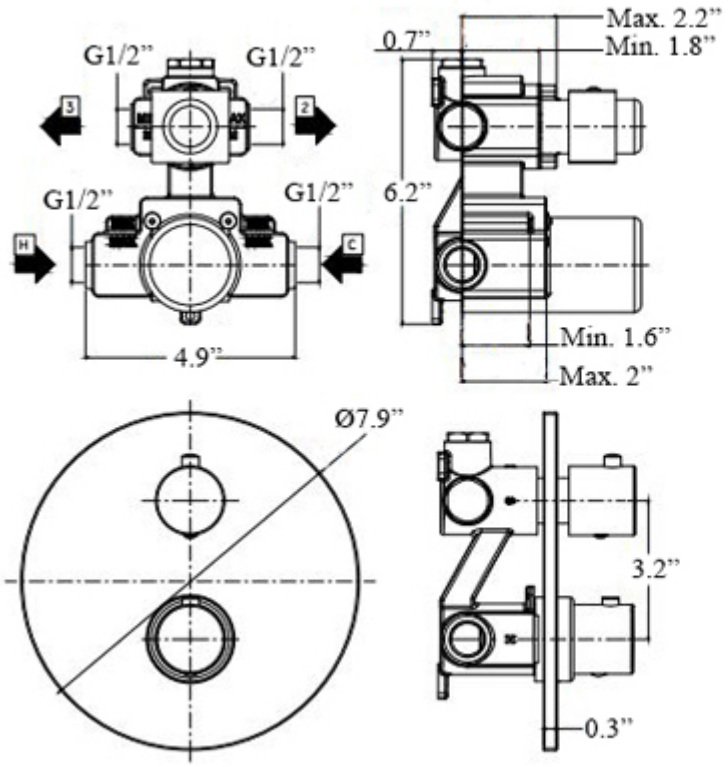

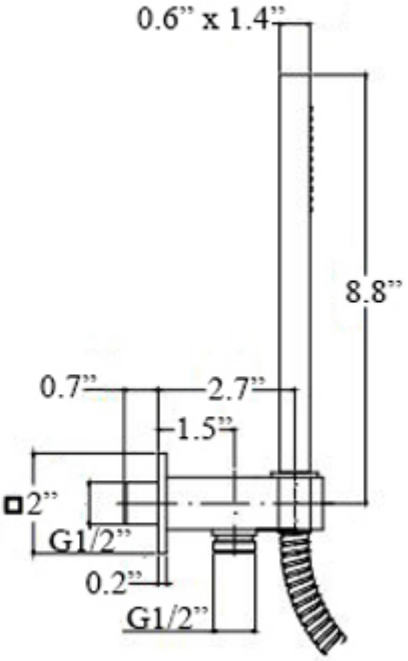

Collection Light	**Model** Light Kit LIQ 018	Dimensions Metric *1 inch = 2.54 cm* *1 inch = 25.4 mm*	WS® BATH COLLECTIONS 1051 Lea Drive - Collegeville, PA 19426 Tel. 215 513 9400 - Fax 610 831 0215 www.wsbathcollections.com - info@wsbathcollections.com