CONTEMPORARY REVERSE OSMOSIS AIR GAP

Model # 2200

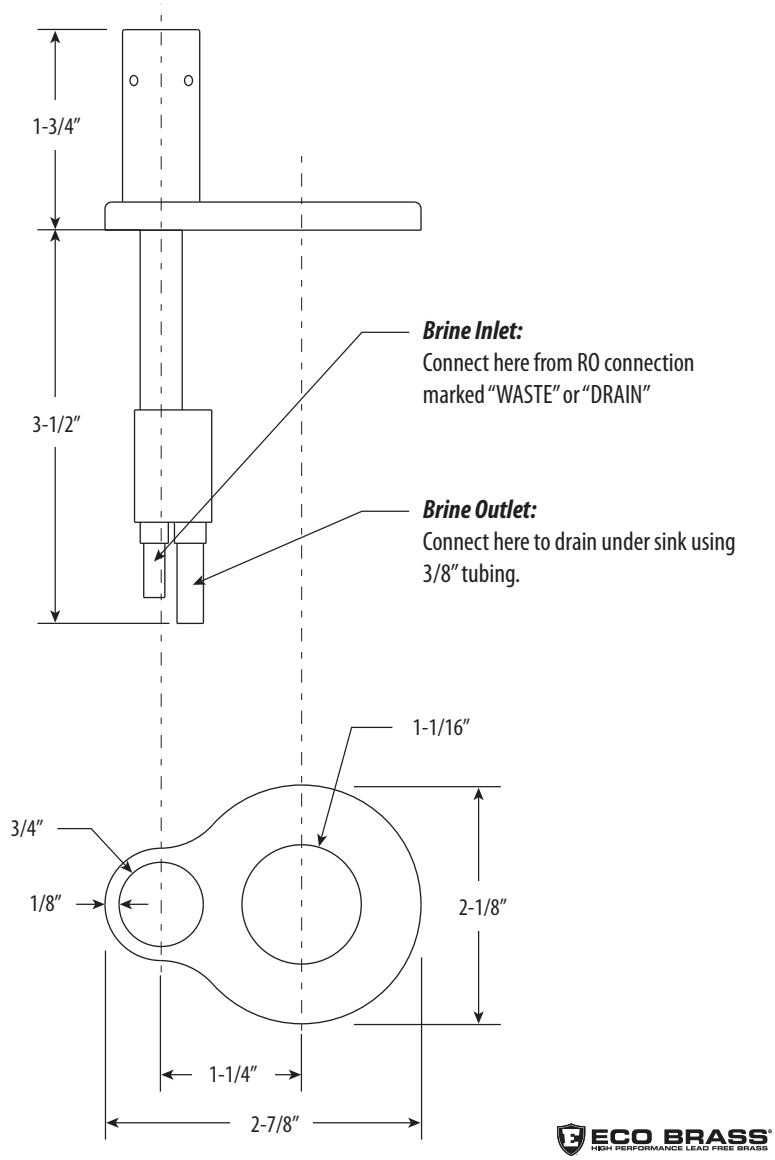

DIMENSIONS MAY VARY AND ARE SUBJECT TO CHANGE. NO RESPONSIBILITY IS ASSUMED FOR USE OF SUPERCEDED OR VOIDED DATA

PRODUCT DESCRIPTION

- Prevents brine water or dirt back into your reverse osmosis filtration system
- Designed for use with Waterstone Filtration Faucets.
- Solid brass or stainless steel construction.
- Made in the USA.

CODES/STANDARDS APPLICABLE

Specified model meets or exceeds the following:

- **ASME A112.18.1**
- **CSA B125.1**

AVAILABLE IN 30 FINISHES + SOLID STAINLESS STEEL

Antique Brass - AB
Antique Bronze - ABZ
Antique Copper - AC
American Bronze - AMB
Antique Pewter - AP
Gloss Black - GB
Black Nickel - BLN
Black-Oil Rubbed Bronze - ORB
Caribbean Bronze - CB
Chocolate Bronze - CHB
Chrome - CH
Classic Bronze - CLZ
Distressed Antique Brass - DAB
Distressed Antique Copper - DAC
Distressed American Bronze - DAMB
Distressed Antique Pewter - DAP
Matte Black - MB
Polished Brass - PB
Polished Copper - PC
Polished Gold - PG
Polished Nickel - PN
Satin Brass - SB
Satin Chrome - SC
Satin Gold - SG
Satin Nickel - SN
*Stainless Steel - SS**
Tuscan Brass - TB
Unlaquered Polished Brass - UPB
Venetian Bronze - VB
Weathered Brass - WB
Weathered Copper - WC

41180 Raintree Court • Murrieta, CA 92562 • 1-888-304-0660 • Fax 951-304-0525 • www.waterstoneco.com

***Contemporary Styles Only**

REVISED: 2-22-18