FIELLE MEDIUM SCONCE

VISUAL COMFORT & CO.

PRODUCT FEATURES

- Clean, modern geometries and intersections serve as a modern nod to postmodern design styles.
- Recessed (integrated) light sources emit light from the tubular elements of each design onto flat reflecting surfaces.
- Each minimalistic design comprises pure, rounded geometries and clean intersections between them.
- Modern finishes available

LAMPING

Includes 11.7 watt, 518 delivered lumens, 2700K 90 CRI LED module. 120V dimmable with most LED compatible ELV and TRIAC dimmers. 277V compatible with 0-10V dimmers. Up or downlight. ADA compliant. 120V or 277V.

ORDERING INFORMATION

KWWS493	COLOR TEMP	FINISH
	27 2700K	HAB HAND RUBBED ANTIQUE BRASS
		W SOFT WHITE

KWWS493 _____ _____

JOB NAME _____

NOTES _____

© 2019 Tech Lighting, L.L.C. All rights reserved. The "Tech Lighting" graphic is a registered trademark of Tech Lighting, L.L.C.
Tech Lighting reserves the right to change specifications for product improvements without notification.

7400 Linder Avenue, Skokie, IL 60077
T 847.410.4400 | F 847.410.4500 | techlighting.com

FIELLE MEDIUM SCONCE

VISUAL COMFORT & CO.

SPECIFICATIONS

PRIMARY MATERIAL	Steel Or Brass
SHADE MATERIAL	Steel Or Brass
NET WEIGHT	4.5 lbs
HEIGHT	21.2in
WIDTH	3.9in
LENGTH	5in
MIN. EXTENSION FROM WALL	3.9in
UP LIGHT / DOWN LIGHT / BOTH?	
WET LISTED	
DAMP LISTED	
DRY LISTED	
UP / DOWN	
HORIZONTAL / VERTICAL	
WALL / CEILING MOUNT	
GENERAL LISTING	ETL Listed
ADA COMPLIANT	
INCLUDES	

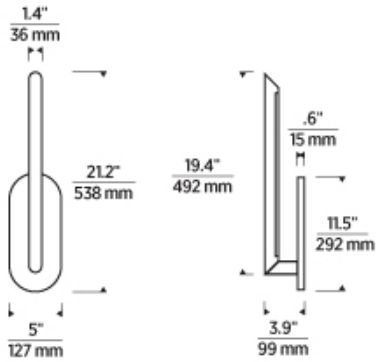

LAMPING SPECIFICATIONS

	LED LAMP	INTEGRATED LED	NON LED	NO LAMP
DELIVERED LUMENS		518		
WATTS		11.7		
MAX WATTAGE PER BULB		11.7W		
		Universal 120V-277V 0-10, ELV, TRIAC		
CCT		2700K		
CRI		90 CRI		
LED LIFETIME				
L70		>50000		
AVERAGE BULB HOURS				
FIELD SERVICEABLE LED				
LAMP BASE		Integrated LED		
LAMP SHAPE		Integrated LED		
LAMP INCLUDED?		True		
WARRANTY**		5 Years		

* Dimming information available at www.techlighting.com/Downloads#dimming
** Visit techlighting.com for specific warranty limitations and details.

T20 / T24 / JA8 INFORMATION

	Integrated LED	Replacement LED Lamp	No Lamp *
This product can be used to comply with California Building Energy Efficiency Standards 2016 Title 24 Part 6 / JA8.	Yes		
This product can be used to comply with California Appliance Efficiency Standards 2016 Title 20 and may be shipped to and sold in California.			

* If a light fixture or component does not include a lamp or light source, it is the responsibility of the customer to select a lamp that meets the T24 and T20 requirements.

© 2019 Tech Lighting, L.L.C. All rights reserved. The "Tech Lighting" graphic is a registered trademark of Tech Lighting, L.L.C.
Tech Lighting reserves the right to change specifications for product improvements without notification.

7400 Linder Avenue, Skokie, IL 60077
T 847.410.4400 | F 847.410.4500 | techlighting.com