**SPEC SHEET**

**Venini Single Sconce**
Item # CHD 2620AB-L

Designer: Chapman & Myers

Height: 15.25"
Width: 4.75"
Extension: 6"
Backplate: 4.5" Square
Finishes: AB, BZ, PN
Shade Treatments: L
Shade Details: 3.5" x 4.75" x 6.25"
Socket: E12 Candelabra
Wattage: 25 B
Note: UL Only
©EFC DESIGNS

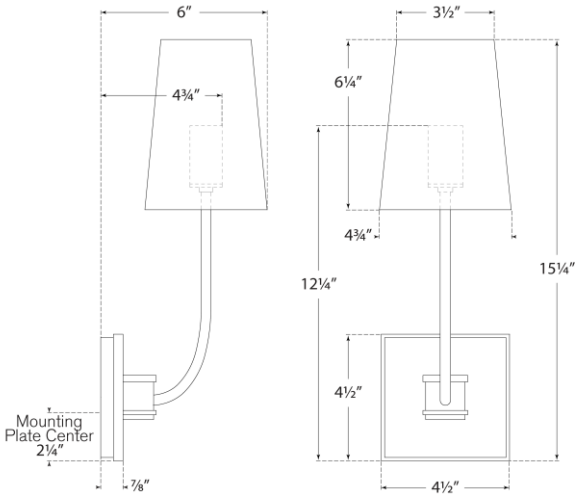


VISUAL COMFORT