**SPEC SHEET**

**Illana Medium Lantern**

Item # JN 5632BSL

Designer: Julie Neill

Height: 35.75"
Width: 18.5"
Canopy: 5" Round
Finishes: AGL, BSL, PW
Shade Treatments: N/A, L
Socket: 4 - E12 Candelabra
Wattage: 4 - 60 C

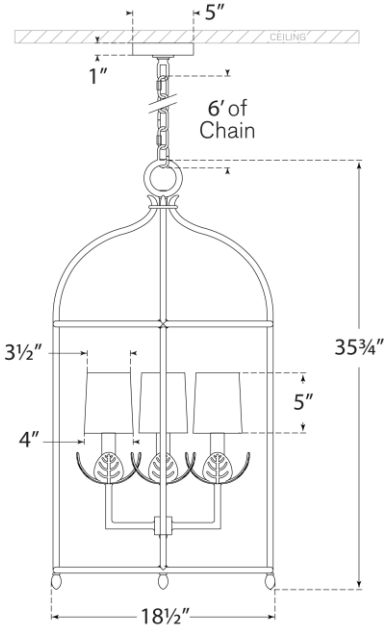


Front View

VISUAL COMFORT