## ASSEMBLY INSTRUCTIONS

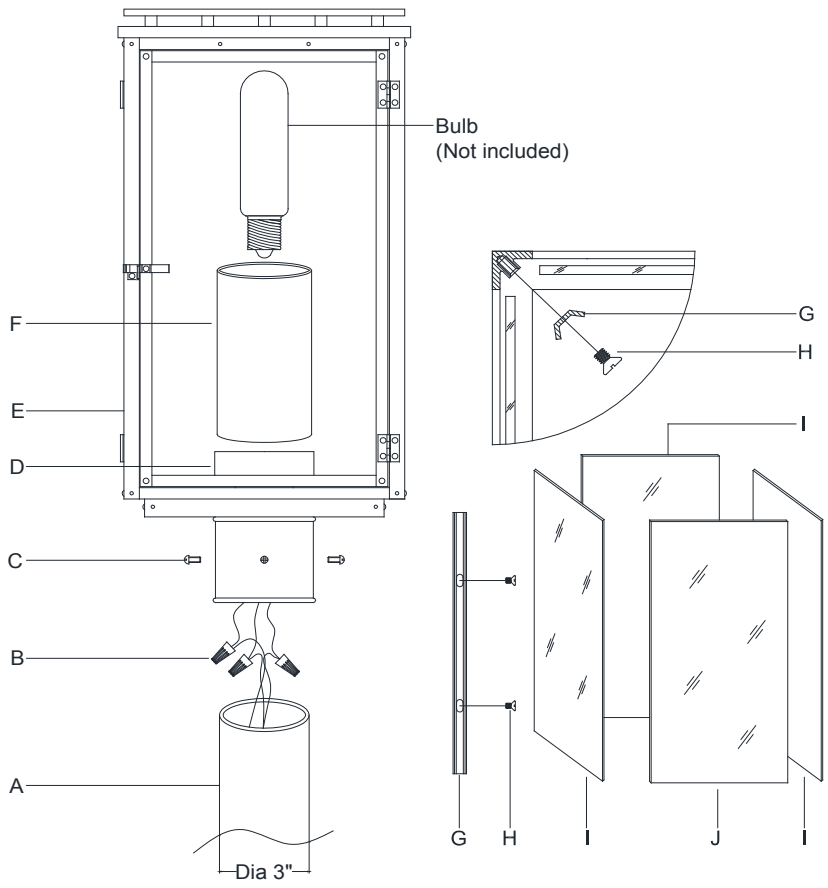


**DO NOT INSTALL ON POST OR POLE THAT RESULTS IN A VERTICAL RISE OF 25 FEET OR HIGHER.**

# Cheshire Post Light

Item # CHO 7605

**WE RECOMMEND INSTALLATION OF THIS LIGHTING FIXTURE BE DONE BY A LICENSED ELECTRICIAN.**

**WARNING***SWITCH OFF THE MAIN ELECTRICAL SUPPLY FROM THE MAIN FUSE BOX/CIRCUIT BREAKER BEFORE INSTALLATION.**

**INSPECT ITEM CAREFULLY BEFORE ATTEMPTING TO INSTALL. IF THERE IS ANY DAMAGE OR OBVIOUS DEFECT. DO NOT INSTALL.**

**ITEM MAY NOT BE RETURNED ONCE IT HAS BEEN INSTALLED.**

**NOTE: CAREFULLY UNPACK EACH PIECE IN TOP LAYER OF PACKING PRIOR TO REMOVING. RETAIN ALL PACKING MATERIAL UNTIL INSPECTION AND INSTALLATION ARE FINAL.**

1. Carefully remove all parts from the box.
2. Open the door, install the glass panels (I) to the frame (E) and secure with the bars (G) and screws (H).
   ATTENTION: DO NOT OVER TIGHTEN SCREWS.
3. Install the glass panel (J) to the front door and secure by bending the metal tabs.
4. Connect ground wire from the fixture (bare copper) to the ground wire from the outlet box (usually green or copper in color) using wire nut (B).
   IT IS IMPERATIVE THAT THIS FIXTURE BE GROUNDED.
5. Connect the fixture Neutral wire (WHITE) with the neutral wire (White) from the outlet box using wire nut (B).
6. Connect the fixture Hot wire (BLACK) with the hot wire (Black) from the outlet box using wire nut (B).
7. Tuck wire connections neatly into post cup.
8. Put the lantern onto the post (A).
9. Use provided screws (C) to fix the lantern on the post.
10. Put the glass shade (F) on the holder (D).
11. Insert bulb (not included) into the socket, then close the door.
12. Installation is complete, turn on power at fuse or circuit breaker.

***Clean with a dry, soft cloth only. Use no harsh abrasives or chemical agents.

Intertek

VISUAL COMFORT & CO. Est. 1987