SPEC SHEET

Andreas Medium Table Lamp

Item # JN 3608WTC-L

Designer: Julie Neill

Height: 28.5"
Width: 18"
Base: 8" Round
Finishes: AVN, BJD, WTC
Shade Treatments: L
Shade Details: 17" x 18" x 11"
Socket: E26 Dimmer
Wattage: 100 A
Note: UL Only | Reactive Ceramic Glazes Will Vary in Color and Texture

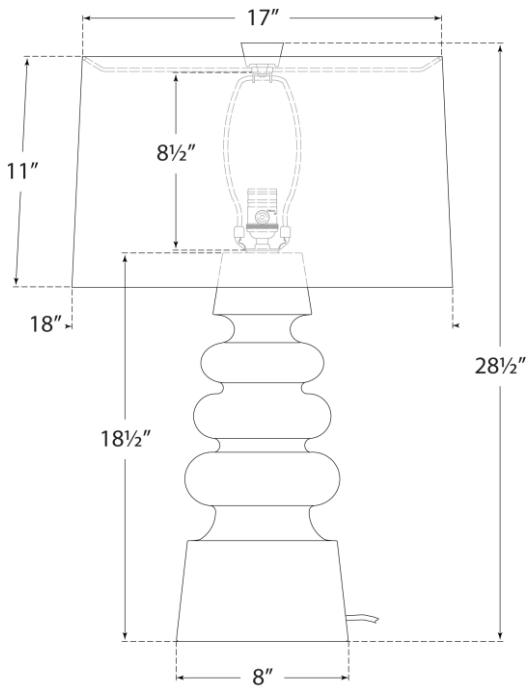

VISUAL COMFORT