SPEC SHEET

Eyre Large Hanging Shade
Item # KS 5082SB/WG-L/CRE

Designer: kate spade new york

O/A Height: 50.5"
Fixture Height: 15.25"
Min. Custom Height: 22.5"
Width: 28"
Canopy: 4.5" Round
Finishes: PN/WG, SB/WG
Shade Treatments: L/CRE, L/LLC, NL/CRE
Socket: E26 Keyless
Wattage: 15 LED A
Note: Custom Height Available

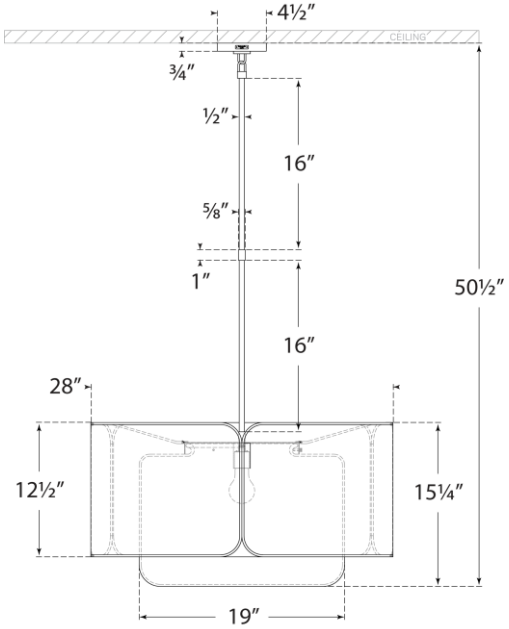

Front View

VISUAL COMFORT