ASSEMBLY INSTRUCTIONS

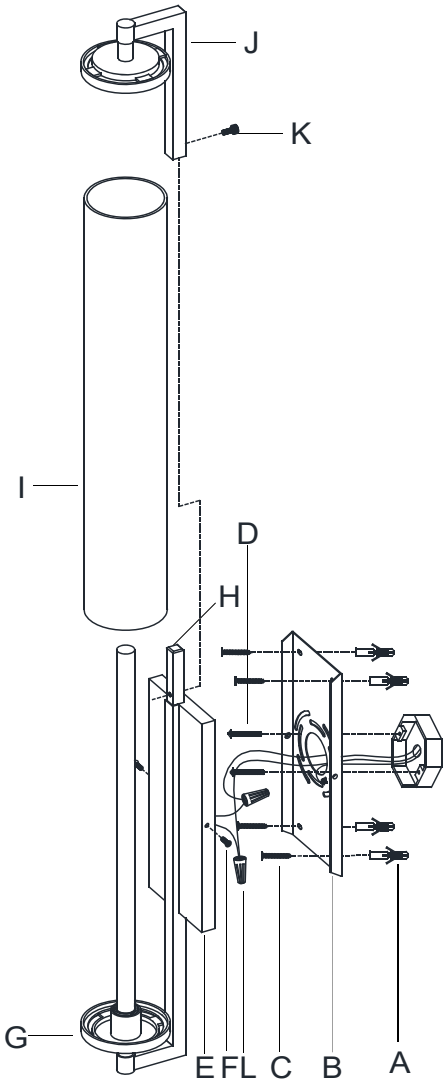

Landis 24" Bath Light

Item # TOB 2707

WE RECOMMEND INSTALLATION OF THIS LIGHTING FIXTURE BE DONE BY A LICENSED ELECTRICIAN.
WARNING*SWITCH OFF THE MAIN ELECTRICAL SUPPLY FROM THE MAIN FUSE BOX/CIRCUIT BREAKER BEFORE INSTALLATION.**
INSPECT ITEM CAREFULLY BEFORE ATTEMPTING TO INSTALL. IF THERE IS ANY DAMAGE OR OBVIOUS DEFECT. DO NOT INSTALL.
ITEM MAY NOT BE RETURNED ONCE IT HAS BEEN INSTALLED.
NOTE: CAREFULLY UNPACK EACH PIECE IN TOP LAYER OF PACKING PRIOR TO REMOVING. RETAIN ALL PACKING MATERIAL UNTIL INSPECTION AND INSTALLATION ARE FINAL.

---

1. Carefully remove all parts from the box.
2. Remove the mounting plate (B) from the backplate (E) by loosening the side screws (F).
3. Put the mounting plate (B) on the wall, mark the anchor holes position with pencil (not included). Drill holes on the wall and insert the anchors (A) into the holes.
4. Install the mounting plate (B) to the junction box and secure with the mounting screws (D), then secure the wood screws (C) to the anchors (A) and lock tight.
5. Remove the bracket (J) from the arm (H) by loosening the screw (K).
6. Place the glass shade (I) sit on the shade holder (G),then install the bracket (J) to the arm (H) and secure with the screw (K).
7 Wrap the junction box ground wire to the green ground screw on the mounting plate (B) and secure.
   IT IS IMPERATIVE THAT THIS FIXTURE BE GROUNDED.
8. Connect the fixture white wire to the neutral wire in the junction box using the wire nut (L).
9. Connect the fixture black wire to the hot wire in the junction box using the wire nut (L).
   DO NOT REVERSE THE HOT AND NEUTRAL CONNECTIONS OTHERWISE SAFETY WILL BE COMPROMISED.
10. Install the backplate (E) to the mounting plate (B) and secure with the side screws (F).
11. Installation is complete, turn on power at fuse or circuit breaker.

***Clean with a dry, soft cloth only. Use no harsh abrasives or chemical agents.

Intertek

DAMP

VISUAL COMFORT & CO.