SPEC SHEET

Arabelle Medium Sconce

Item # ARN 2306BSL

Designer: AERIN

Height: 14"
Width: 7.75"
Extension: 5"
Backplate: 4.25" x 6.25" Rectangle
Finishes: BSL, G
Socket: 2 - E12 Candelabra
Wattage: 2 - 40 B

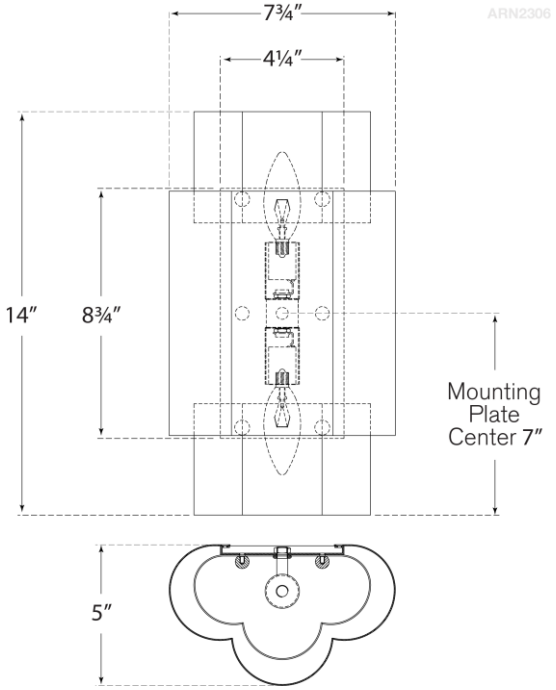

VISUAL COMFORT