DUMMY INSTALLATION AND DOOR PREPARATION TEMPLATE

FOLD ALONG DOTTED LINE - EDGE OF DOOR

(2) FOLD TEMPLATE ALONG DOTTED LINE, AND POSITION FOLD ON THE EDGE OF THE DOOR. TAPE TEMPLATE TO FACE OF DOOR.

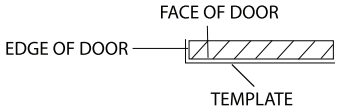

HOLES ON DUMMY MOUNT FOR ALIGNMENT PIN

NOTE: THERE IS AN <u>ALIGNMENT PIN</u> ON THE BACK SIDE OF THE ROSETTE THAT INSERTS INTO THE HOLES ON THE DUMMY MOUNT AT EITHER 3 OR 9 O'CLOCK.

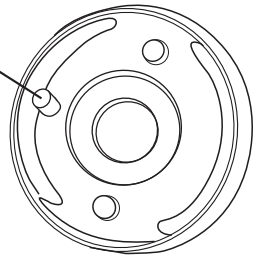

BACK SIDE OF ROSETTE

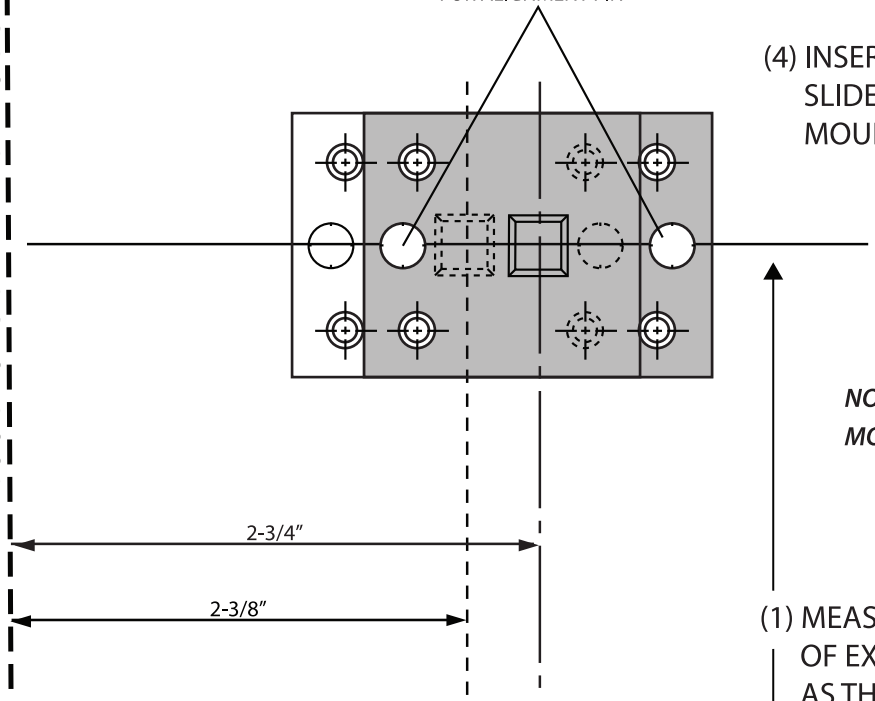

(4) INSERT FOUR WOOD SCREWS, SLIDE ROSETTE OVER DUMMY MOUNT.

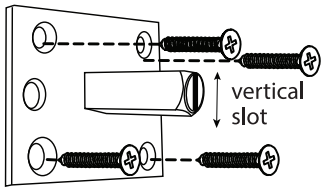

NOTE: SLOT IN DUMMY MOUNT MUST BE VERTICAL!

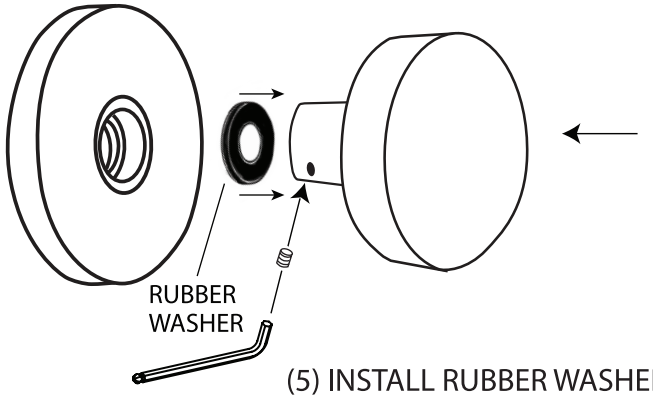

(5) INSTALL RUBBER WASHER ON KNOB/LEVER.

(6) SLIDE KNOB/LEVER ONTO DUMMY MOUNT WITH HEX SCREW ON BOTTOM.

(7) PRESS AGAINST DOOR, AND TIGHTEN HEX SCREW WITH INCLUDED WRENCH.

(1) MEASURE FROM THE FLOOR TO THE CENTER OF EXISTING LOCKS, AND USE THIS DISTANCE AS THE CENTER OF THE DUMMY MOUNT. IF THERE ARE NO EXISTING LOCKS, POSITION THE DUMMY MOUNT 36" TO 38" FROM THE FLOOR.

FLOOR

(3) BEFORE DRILLING VERIFY THE BACKSET OF YOUR EXISTING DOORS IN YOUR HOUSE. DRILL PILOT HOLES USING A 5/64" DIAMETER BIT.