ASSEMBLY AND INSTALLATION INSTRUCTIONS

T0845

WARNING: Turn off the main power at circuit breaker before installing fixture.
AVERTISSEMENT: Coupez la source d'alimentation principale au panneau central de disjoncteurs avant d'installer le luminaire.

NOTES: 1. Before installing, consult local electrical codes for wiring and grounding requirements.
2. Read and save these instructions.

Hardware Package (included):

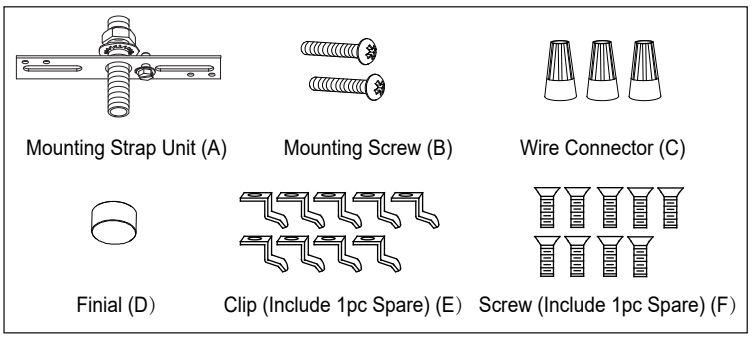

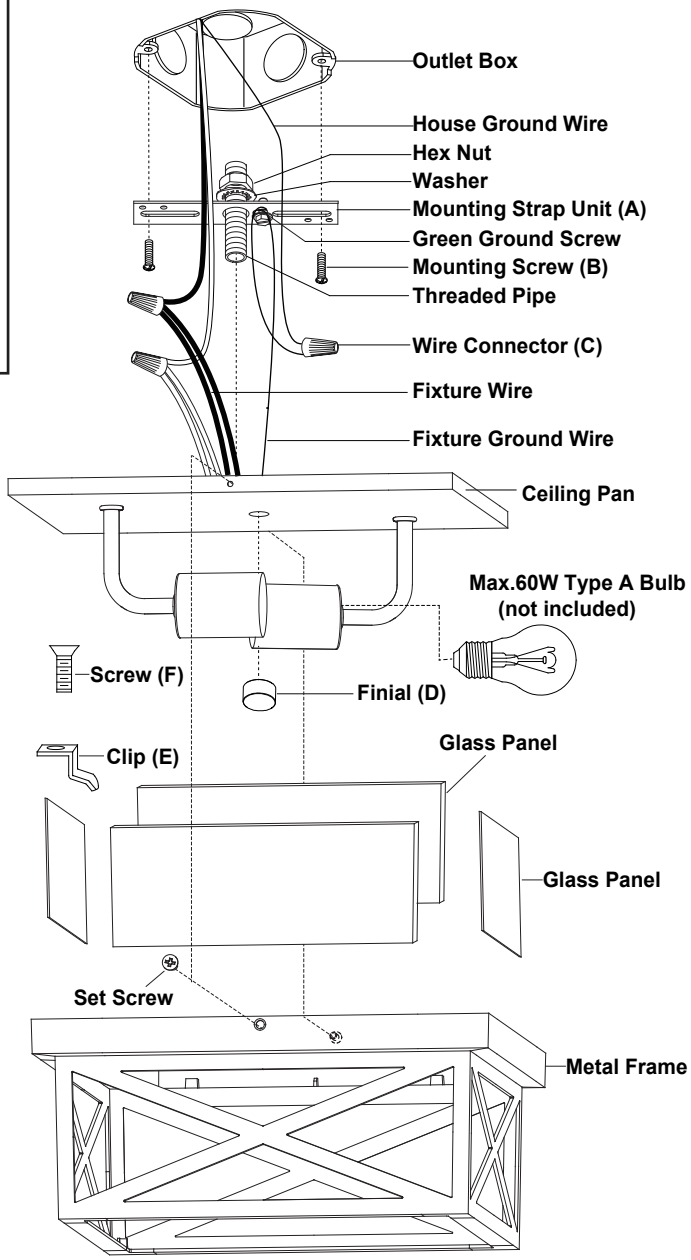

Installation Steps

Turn off the power at fuse or circuit box.

1. Unscrew the two set screws, remove the metal frame from the ceiling pan.

2. Attach the mounting strap unit (A) to the outlet box by using two mounting screws (B).
   Note: The depth of threaded pipe on the mounting strap unit may need to be adjusted to properly fit the fixture.

3. Remove the finial (D) from the mounting strap unit (A).

4. Pull out the source wires from the outlet box. Make wire connections using wire connectors (C) as follows:
   - Connect the hot wires (black insulation) from the fixture to the black wire from the power source.
   - Connect the neutral wires (white insulation) from the fixture to the white wire from the power source.
   - Attach the fixture ground wire (bare wire) to the mounting strap unit (A) with the green ground screw, then depending on local code, connect it to the house ground wire with the wire connector (C).

   Carefully put all of the wires back into the outlet box.

5. Attach the ceiling pan to the mounting strap unit (A) by inserting threaded pipe into the center hole of the ceiling pan and secure it with the finial (D).
   NOTE: Depth of threaded pipe may need to be adjusted to properly fit the finial.

6. Insert four glass panels inside the metal frame carefully, then secure the four glass panels with clips (E) and the screws (F). Finally attach the metal frame to the ceiling pan and secure it with the two set screws.

VAXCEL

260316

7. Install the bulbs (not included).
   See relamping label at socket area or packaging for maximum wattage allowed.

Turn on the power at fuse or circuit box.

The following parts are available for reorder if damaged or missing.

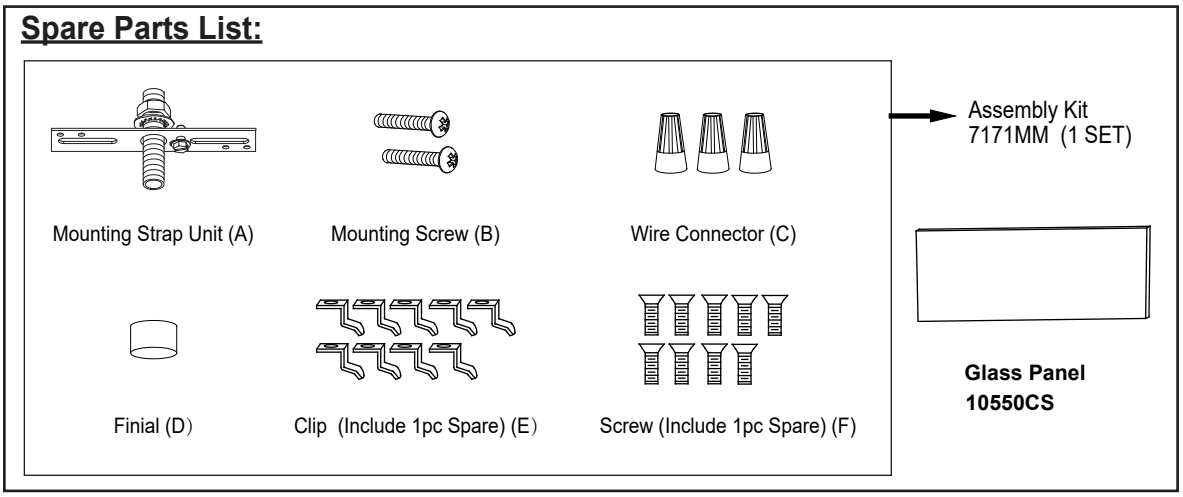

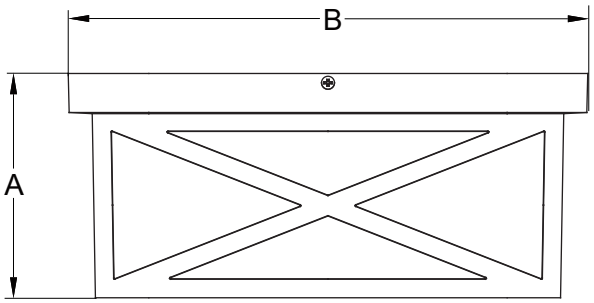

A: 4-3/4"

B: 11"

1 Year Warranty

Vaxcel warrants all of our products against defects in workmanship and finishes for one year following the date of shipment.

Exclusions: This warranty does not include the failure of products from extreme acts of nature; environmental conditions not suited for the products intended use; operation in temperatures outside of the range specified in the instruction manual; usage with improper power supply, power surges or dips. For coastal locations, some corrosion is considered normal for the environment.

Vaxcel reserves the right to repair, replace or issue a credit for any properly installed product, provided it is returned per RMA instruction. This warranty is limited to the cost of the product only and does not extend to transportation, installation or replacement costs.

How can warranty service be obtained?
info@vaxcel.com
1-800-482-9235

VAXCEL
260316