PANEL CONTROL DIMENSIONS		
DIM "A"	DIM "B"	PANEL SIZE
762(2-6")	482.6	518x271
812.8(2-8")	533.4	568x271
863.6(2-10")	584.2	619x271
914.4(3-0")	635	670x271
965.2(3-2")	685.8	721x271
1016(3-4")	736.6	772x271
1066.8(3-6")	787.4	822x271

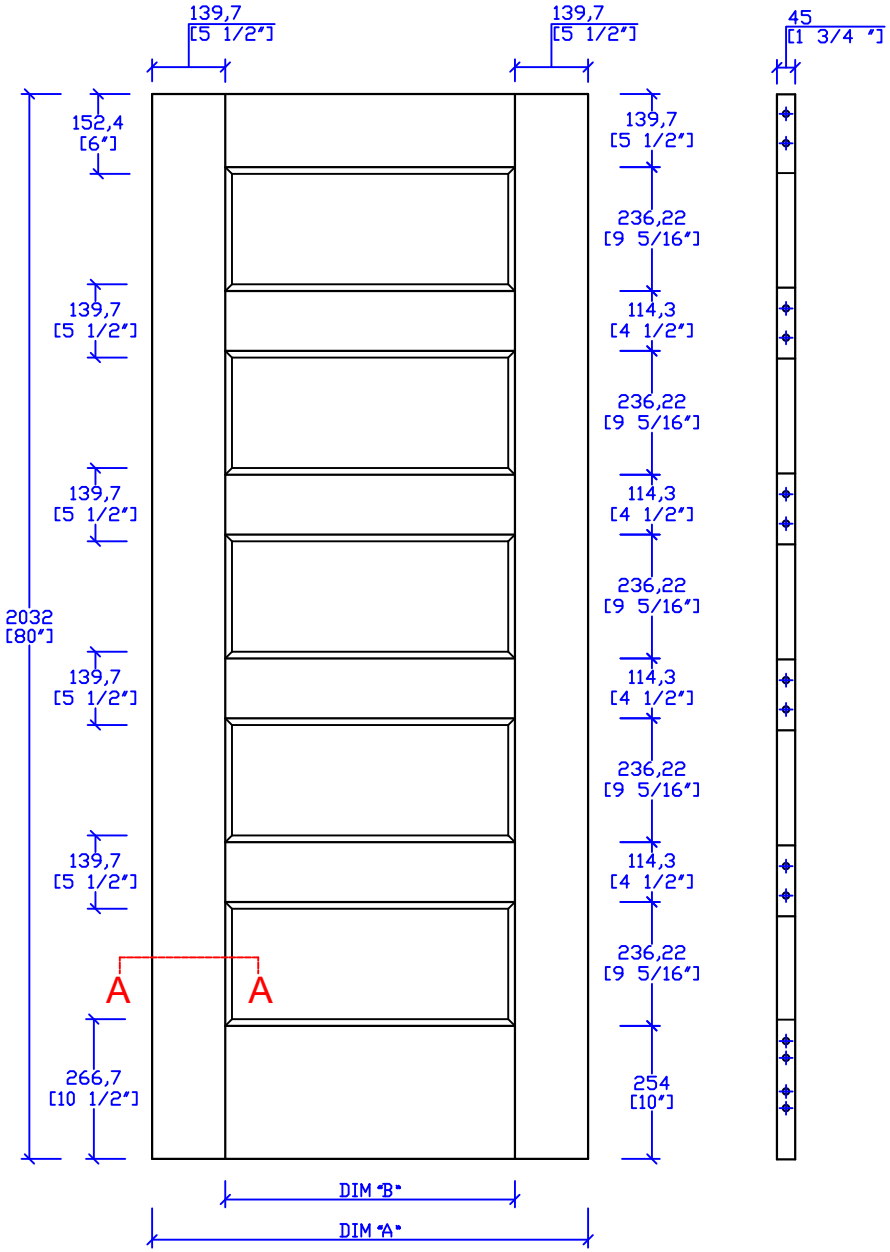

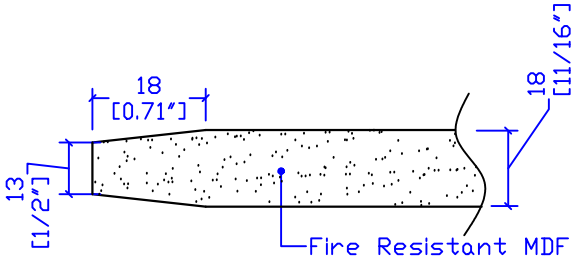

PANEL END SECTION

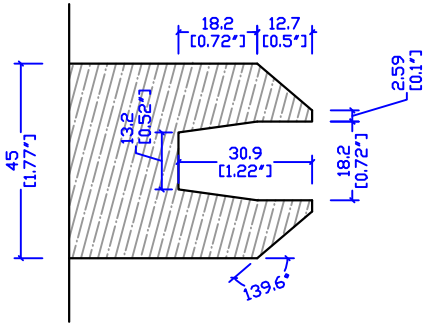

1800FR STILE SECTION

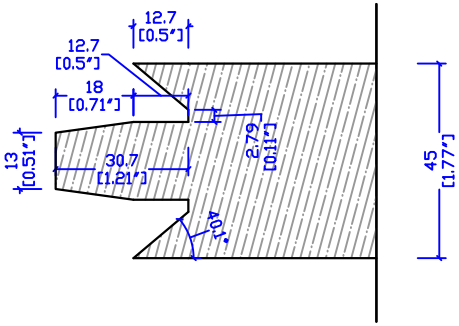

1800FR RAIL SECTION

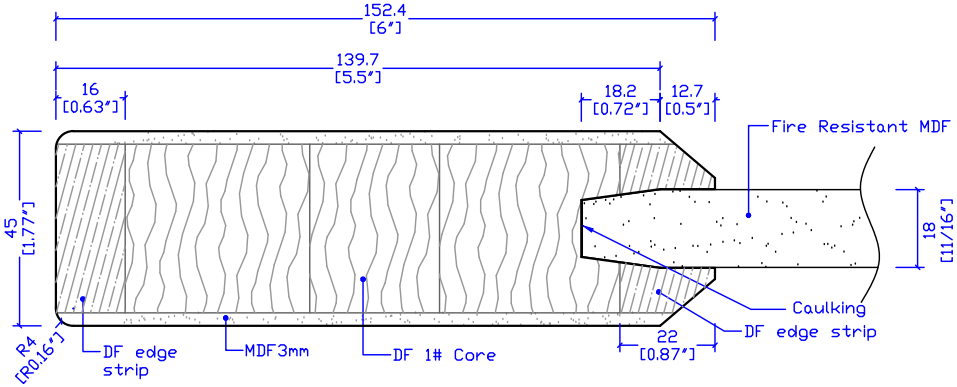

1800FR SECTION A-A

THIS DRAWING AND THE INFORMATION CONTAINED HEREIN IS PROPRIETARY TO TRIMLITE COMPANY AND SHALL NOT BE REPRODUCED, COPIED OR DISCLOSED IN WHOLE OR PART, OR USED FOR MANUFACTURE OR FOR ANY OTHER PURPOSE WITHOUT THE WRITTEN PERMISSION OF TRIMLITE COMPANY.

Rev. #	Description	Date	by Whom
A		2025.04.14	Wang

TITLE: 1805BR10FR

(1-3/4"x6-8")Pri

DRAWING NO. T-1805BR10FR-80

LAYOUT 15/24 | SCALE NTS | DIMENSIONS ARE IN mm/[in "]

DRAWN BY: | DATE

TRIMLITE