DOOR SIZE	DIM "A"	DIM "B"	PANEL SIZE 18mm	
2-8	813 (32")	533. 4 (21")	569x919 (22. 4"x36. 381")	569x622 (22. 4"x24. 488")
3-0	914 (36")	635. 0 (25")	670x919 (26. 378"x36. 381")	670x622 (26. 378"x24. 488"

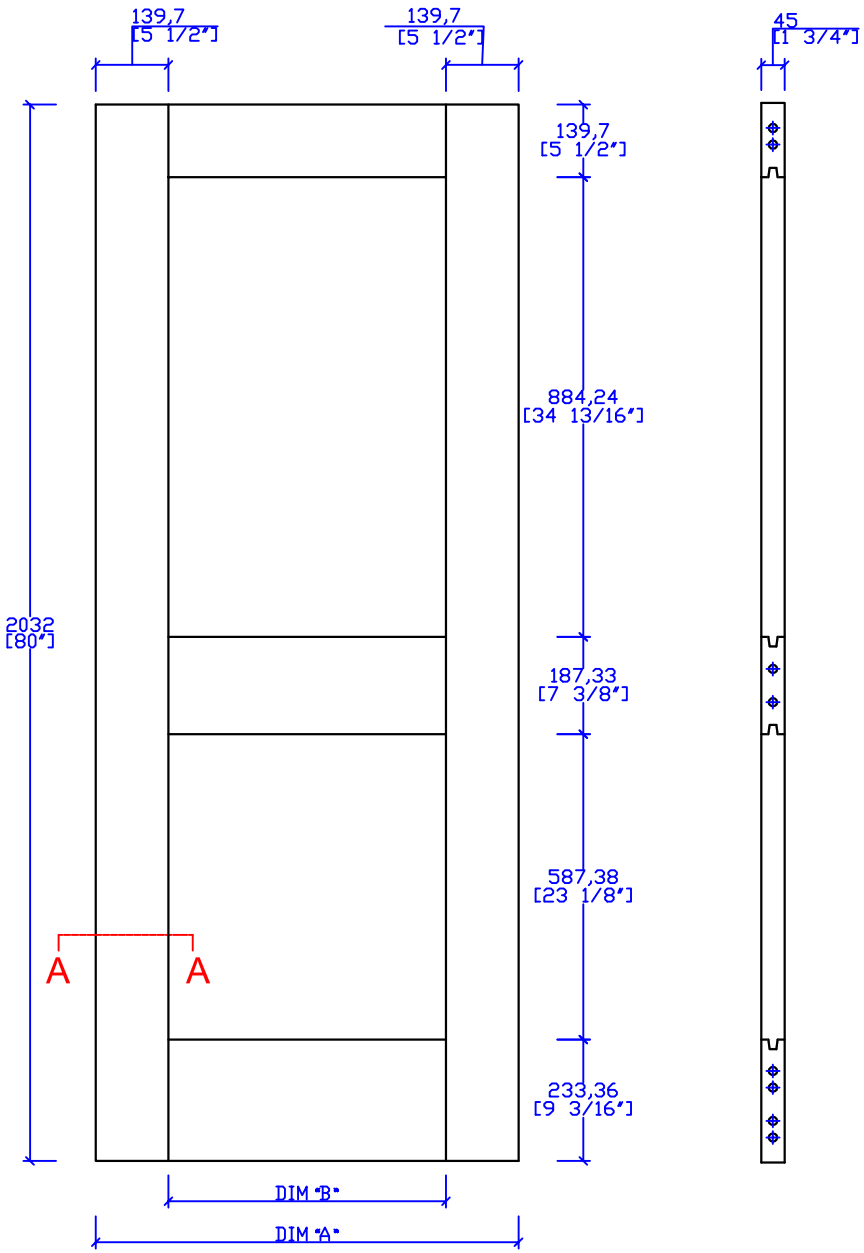

THIS DRAWING AND THE INFORMATION CONTAINED HEREIN IS PROPRIETARY TO TRIMLITE COMPANY AND SHALL NOT BE REPRODUCED, COPIED OR DISCLOSED IN WHOLE OR PART, OR USED FOR MANUFACTURE OR FOR ANY OTHER PURPOSE WITHOUT THE WRITTEN PERMISSION OF TRIMLITE COMPANY.

Rev. #	Description	Date	by Whom
A		2016.12.19	

TITLE
8402-FR
(1-3/4"x6-8") MDF

DRAWING NO. T-8402FR-80-45

LAYOUT 5/12 | SCALE NTS | DIMENSIONS ARE IN mm/[in "]

DRAWN BY: | DATE

TRIMLITE