TILE REDI® REDI TRENCH®

INVENTORY
SHOWER PAN

MODEL
RT4260R-PVC-MB

(Not to scale)

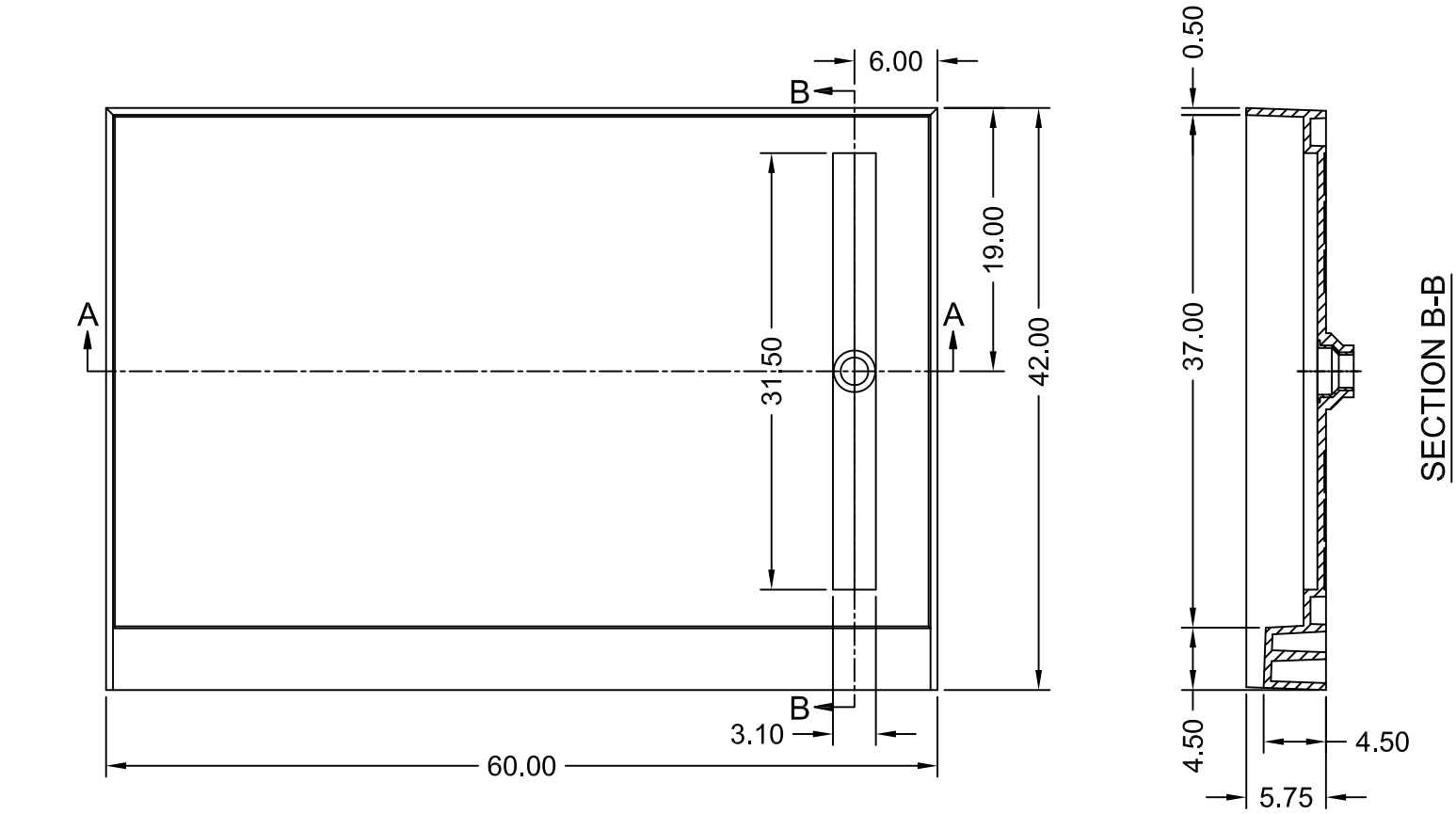

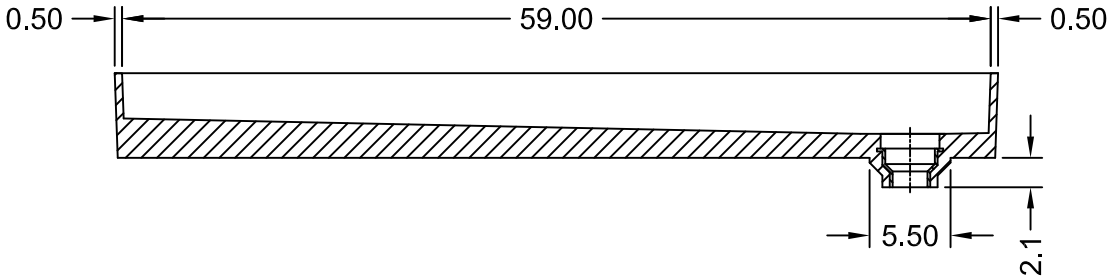

SECTION A-A

ANSI Z124.1-95	ASTM F462-79
ANSI Z124.2-95	B45.0-02
ICC/ANSI A117.1.98	B45.5-02

Toll Free 800.232.6156 techsupport@tileredi.com
Tel: 954.323.0125
Fax: 954.344.8064 www.tileredi.com

tile redi® Perfection through Innovation

2019.04.24

© 2014 TILE REDI USA, LLC