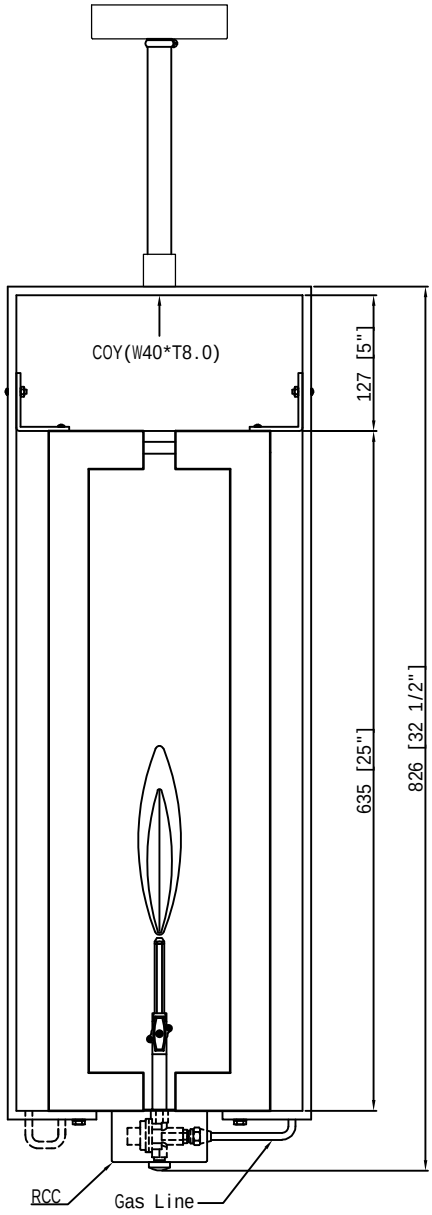

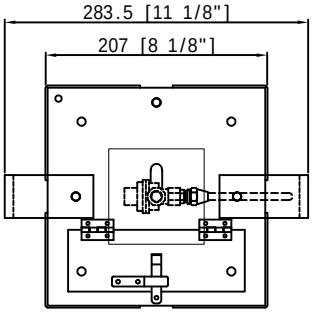

THIS DRAWING IS PROPERTY OF THE COPPERSMITH INC. AND IS SUBMITTED IN CONFIDENCE AND SHALL NOT BE REPRODUCED, COPIED NOR TO OTHERS WITHOUT WRITTEN PERMISSION FROM THE COPPERSMITH INC.

REVISION DESCRIPTION		
REV:A/0		
DATE:03/04/2023		
DRAWING BY:Jason Huang		
	APPD	
	APPD	
	QTY	
	JOB NO.	
	DATE	
	SCALE	

LIMITS NOT SPECIFIED
FRACTION ± 1/32 - ANGULAR ± 1/2°
.0 ± .010 - .00 ± .005 - .000 ± .0025

MATL	
ASSY	

The CopperSmith (BDT)

9152 Hard Drive

Foley Alabama 36536

NAME

DRAWING NUMBER New Biltmore Lantern with New COY(A)

SHEET NUMBER