Voltaire

Drop-in Bathtub

SM-DB559, SM-DB561, SM-DB563, SM-DB565
SM-DB560, SM-DB562, SM-DB564, SM-DB566

Features

- 3-sided integral tile flange
- Front apron return
- Fiberglass Reinforced Acrylic
- Lightweight
- Adjustable feet for ease of leveling

- Pre-drilled side drain & overflow hole
- Pre-drilled / slip resistant coating
- Available in left, right, or reversible drain

Specifications

- Drop-in Installation
- Adjustable feet for ease of leveling
- Lumbar support
- Flat-bottom
- Fiberglass Reinforced Acrylic
- High-gloss finish
- 16″ soaking depth
- One Year Limited Warranty
- c/UPC & UPC Certified

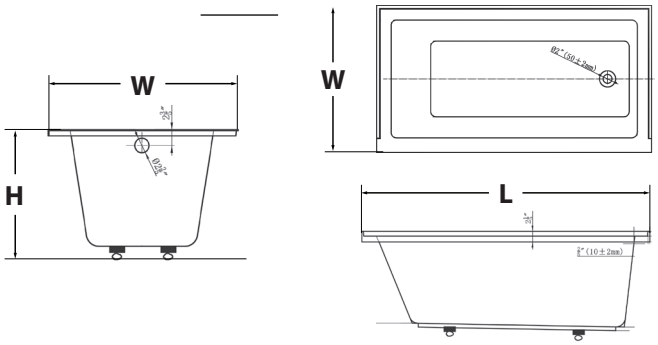

Drain Location	Model SKU	L x W x H	Product Weight	Water Capacity	Indicate Model
Left Hand Drain	SM-DB559	60" x 30″ x 20″	66 lbs.	66 gal.	☐
	SM-DB561	48″ x 32″ x 20″	54 lbs.	55 gal.	☐
	SM-DB563	60" x 32″ x 20″	68 lbs.	68 gal.	☐
	SM-DB565	66" x 32″ x 20″	73 lbs.	73 gal.	☐
Right Hand Drain	SM-DB560	60" x 30″ x 20″	66 lbs.	66 gal.	☐
	SM-DB562	48″ x 32″ x 20″	54 lbs.	55 gal.	☐
	SM-DB564	60" x 32″ x 20″	68 lbs.	68 gal.	☐
	SM-DB566	66" x 32″ x 20″	73 lbs.	73 gal.	☐
Reversable Drain	SM-DB567	72″x 36″x 19″	77 lbs.	86 gal.	☐