CWM2ADA



34" x 26" x 24" (H x W x D)

Fully assembled casework cabinet with two storage drawers in ADA compliant height and black finish designed to accept compact microwaves

Highlights:

Ships fully assembled

Made in the USA

34" counter height to meet ADA guidelines for accessibility

Product Features:

Casework microwave cabinet with storage	26" wide cabinet with an opening to accept compact appliances
Ships fully assembled	No assembly required for fast installation in your space
ADA Compliant height	34" high to meet ADA guidelines for accessibility
Made in the USA	Engineered wood with laminate finish manufactured and assembled in the United States
12.5" H x 24.5" W opening	Allows you to place a small appliance such as a microwave, coffeemaker, or toaster oven inside
Cord cutout	Rear includes a pre-installed hole to easily run a power cord through
Lower storage	2 slide-out drawers accommodate a variety of items
Compatible with Summit units	Designed to accept our popular SM1102WH, SCM853, SM902BL, or SM903BSA microwave
Lockdowel™ construction	Innovative fastening system ensures lasting durability

SUMMIT APPLIANCE DIVISION, FELIX STORCH, INC. | ISO 9001:2015 Certified
770 Garrison Avenue Bronx, NY 10474 USA **TEL** 718-893-3900 **FAX** 844-478-8799 info@summitappliance.com **www.summitappliance.com**

CWM2ADA Specifications:

Overview	
Nominal Height	34.0" (86 cm)
Height of Cabinet	34.0" (86 cm)
Nominal Width	26.0" (66 cm)
Width	26.0" (66 cm)
Nominal Depth	24.0" (61 cm)
Depth	24.0" (61 cm)
Cabinet	Black
Weight	150.0 lbs. (68 kg)
Parts & Labor Warranty	90 Days
UPC	761101088525

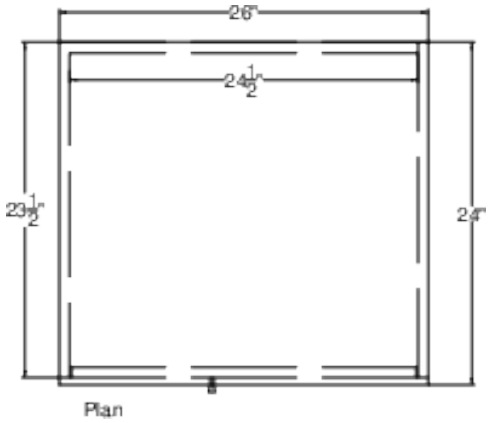

Plan

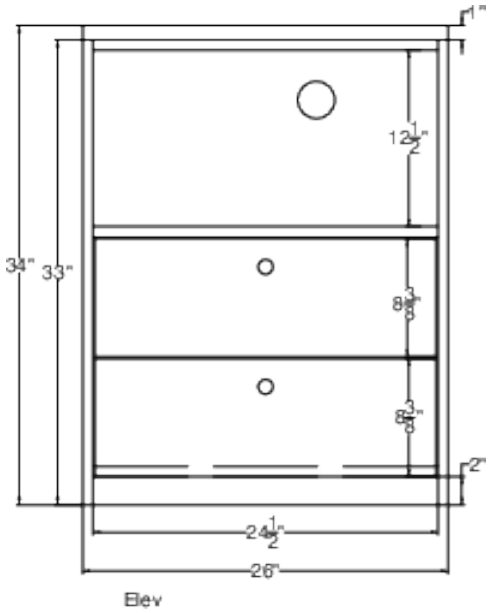

Elev

SUMMIT APPLIANCE DIVISION, FELIX STORCH, INC. | ISO 9001:2015 Certified
770 Garrison Avenue Bronx, NY 10474 USA **TEL** 718-893-3900 **FAX** 844-478-8799 info@summitappliance.com **www.summitappliance.com**