ADRD24PNR



32" x 23.38" x 22.75" (H x W x D)

Commercially listed ENERGY STAR certified panel-ready 2-drawer all-refrigerator in stainless steel designed for indoor or outdoor use under standard or ADA compliant counters

Highlights:

32" height for use under lower ADA compliant counters

Panel-ready drawers allow you to customize the look to match existing cabinetry

Weatherproof construction ensures safe use outdoors

Product Features:

ENERGY STAR certified	Ensures unit runs efficiently with an environmentally friendly performance
Panel-ready drawer fronts	Drawers can be customized with overlay panels sized (at 23.34" x 14.17" at 3/4" thick) to match or accent existing cabinetry
Stainless steel finish	Fully finished drawer fronts also allows you to choose a traditional stainless steel front if not installing overlay panels
Commercially approved	ETL-S listed to NSF-7 standards for commercial use
ADA compliant	32” height allows for installation within ADA-compliant spaces
Adjustable height	Unit can be raised to 34.25", with a taller kickplate included for a seamless look
Built-in capable	Front-breathing design allows the unit to be built-in under counters
Stainless steel construction	Complete 304 grade stainless steel construction provides durability while maintaining an elegant look
Indoor/Outdoor compatible	Durable, weatherproof construction designed to hold up to the elements

SUMMIT APPLIANCE DIVISION, FELIX STORCH, INC. | ISO 9001:2015 Certified
770 Garrison Avenue Bronx, NY 10474 USA **TEL** 718-893-3900 **FAX** 844-478-8799 info@summitappliance.com **www.summitappliance.com**

SUMMIT

ADRD24PNR Specifications:

Overview	
Nominal Height	32.0" (81 cm)
Height of Cabinet	32.0" (81 cm)
Nominal Width	24.0" (61 cm)
Width	23.38" (59 cm)
Nominal Depth	23.0" (58 cm)
Depth	22.75" (58 cm)
Depth with Handle	24.63" (63 cm)
Depth with door at 90°	37.88" (96 cm)
Capacity	4.8 cu.ft. (136 L)
Defrost Type	Frost-Free
Door	Stainless Steel/Panel-Ready
Cabinet	Stainless Steel
US Electrical Safety	ETL
Canadian Electrical Safety	ETL-C
Sanitation	ETL-S
Energy Usage/Year	272.0kWh/year
Amps	0.5
Voltage/Frequency	115 V AC/60 Hz
Weight	95.0 lbs. (43 kg)
Parts & Labor Warranty	1 Year
Compressor Warranty	5 Years
UPC	761101088716
Refrigerator Features	
Sabbath Mode	Yes
Door Swing	Drawer
Height Adjustable	Yes
Thermostat Type	Digital
Fan Type	Interior and Exterior
Refrigerant Type	R600a
Refrigerant Amount	1.09oz.
High Side PSI	320.0
Low Side PSI	120.0
Level Legs Qty	4
Interior Light	Yes
Interior Drawers	Yes

Interior Drawers Qty	2
Temperature Range	34 to 43ºF
Sound Level	34.3 dB
Drawer Dimensions	
Interior Height 1	9.63" (24 cm)
Interior Width 1	16.75" (43 cm)
Interior Depth 1	15.25" (39 cm)
Interior Height 2	10.75" (27 cm)
Interior Width 2	16.75" (43 cm)
Interior Depth 2	15.25" (39 cm)
Dimensions	
Compressor Step Height	4.5" (11 cm)
Compressor Step Width	16.75" (43 cm)
Compressor Step Depth	5.5" (14 cm)

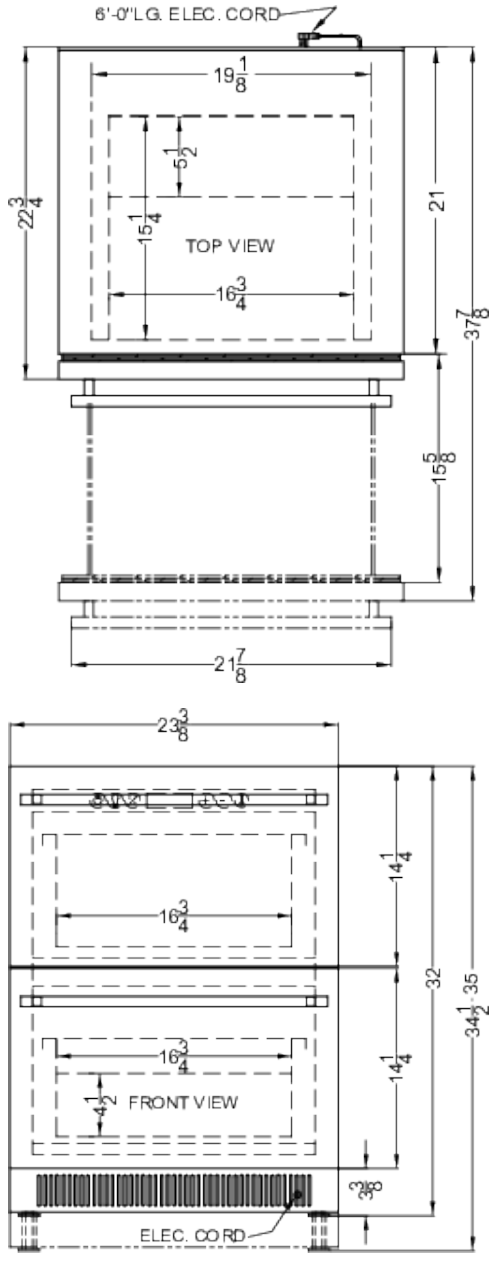

SUMMIT APPLIANCE DIVISION, FELIX STORCH, INC. | ISO 9001:2015 Certified
770 Garrison Avenue Bronx, NY 10474 USA **TEL** 718-893-3900 **FAX** 844-478-8799 info@summitappliance.com **www.summitappliance.com**