SUMMIT®
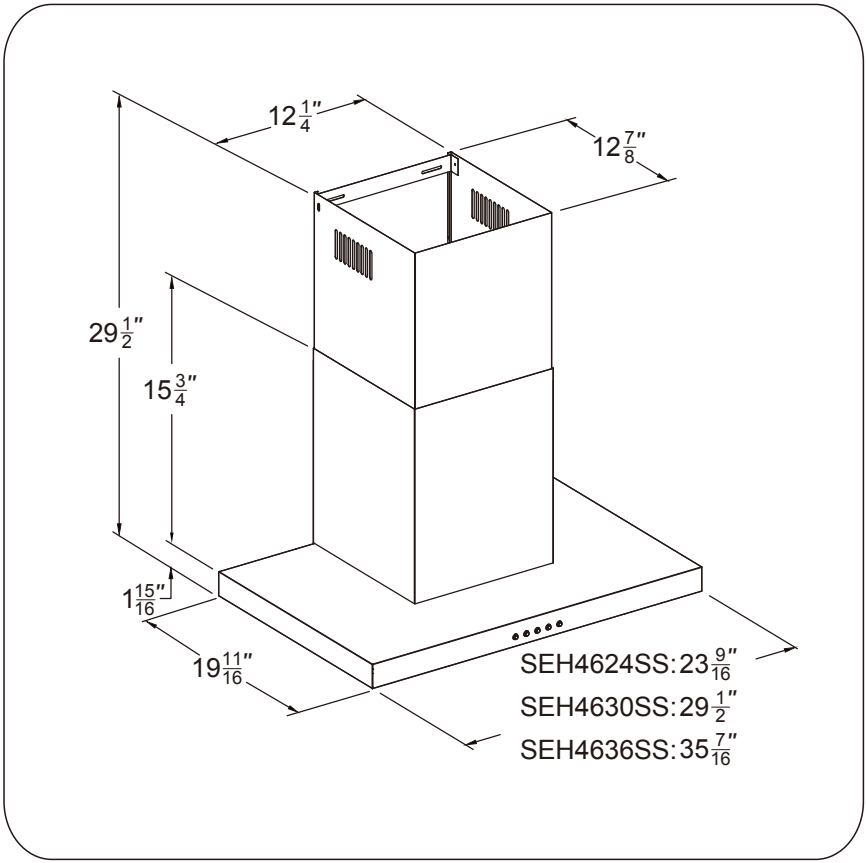
DIMENSIONAL DIAGRAM