INSET GLASS DOOR HINGE

NO SCREW

GH-34/0

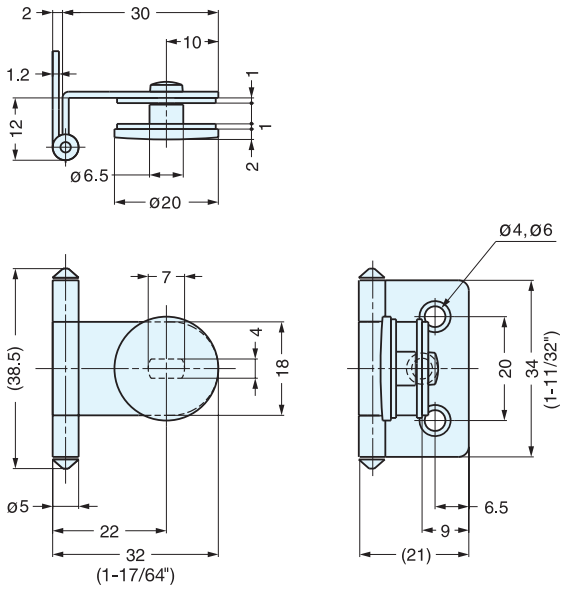

- Hinge for glass/acrylic doors.
- Door thickness: 4~6 mm
- Door size: Max. W450 × H700 (W17-3/4" × H27-9/16")
- Door weight: Max. 4 kg/pair (8.8 lbs/pair)

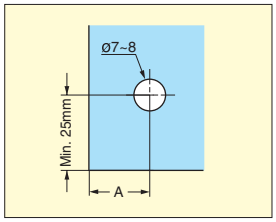

Cut Out Dimension

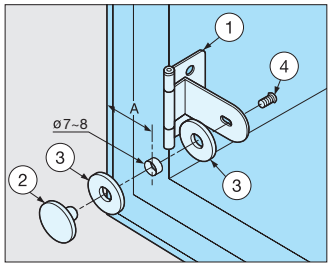

Installation

Glass Thickness (mm)	A (mm)
4 (5/32")	19
5 (3/16")	18
6 (15/64")	17

No.	Part Name	Material	Finish
①	Body	Steel	Chrome
②	Plate	Brass	
③	Washer	PVC	Clear
④	Screw	Steel	Nickel

Item No.	Weight (g)	Box (pcs)	Carton (pcs)
GH-34/0/CR	23.5	150	900

HALF OVERLAY GLASS DOOR HINGE

NO SCREW

GH-34/8

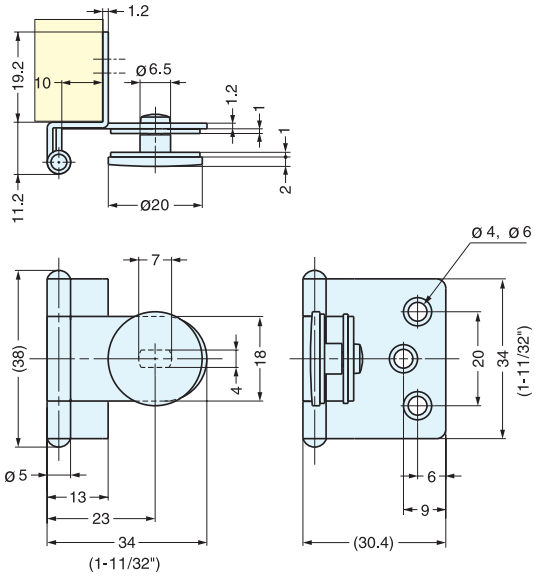

- Half overlay.
- Hinge for glass/acrylic doors.
- Door thickness: 4~6 mm
- Door size: Max. W450 × H700 (W17-3/4" × H27-9/16")
- Door weight: Max. 4 kg/pair (8.8 lbs/pair)

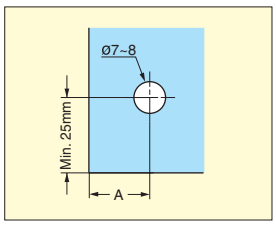

Cut Out Dimension

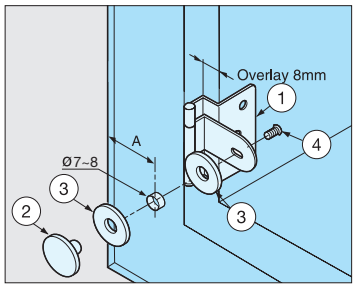

Installation

Glass Thickness (mm)	A (mm)	Overlay (mm)
4 (5/32")	19	8
5 (3/16")	18	7
6 (15/64")	17	6

No.	Part Name	Material	Finish
①	Body	Steel	Chrome
②	Plate	Brass	
③	Washer	PVC	Clear
④	Screw	Steel	Nickel

Item No.	Weight (g)	Box (pcs)	Carton (pcs)
GH-34/8/CR	25	50	500