SPEAKMAN®

SE-253
LIFESAVER® EMERGENCY SHOWER

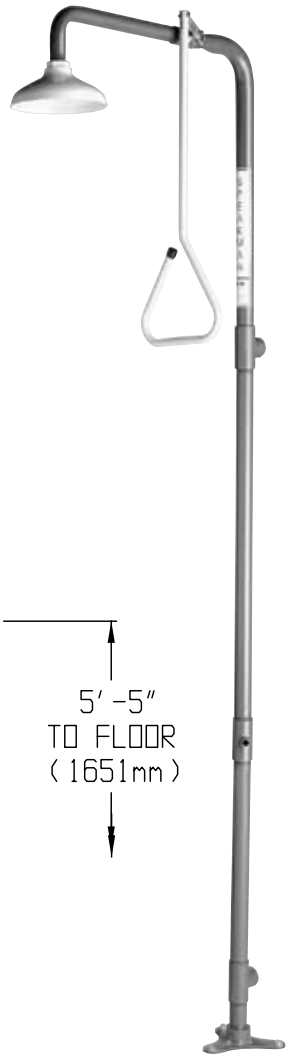

DESCRIPTION

The SE-253 Lifesaver® Emergency Shower features a floor mounted emergency deluge shower supplied with stay-open full flow ball valve, activated by triangular pull rod.

SPECIFICATIONS

Showerhead: 8" Cycolac® yellow plastic
Flow Control: Internal 20 gpm regulator
Valve: 1" NPT female brass, chrome-plated, stay-open valve
Activator: Powder coated yellow, aluminum triangular pull rod
Inlet: 1" NPT female
Performance: 20 gpm @ 20 psi
Compliance: ANSI Z358.1
Universal Emergency Sign Included

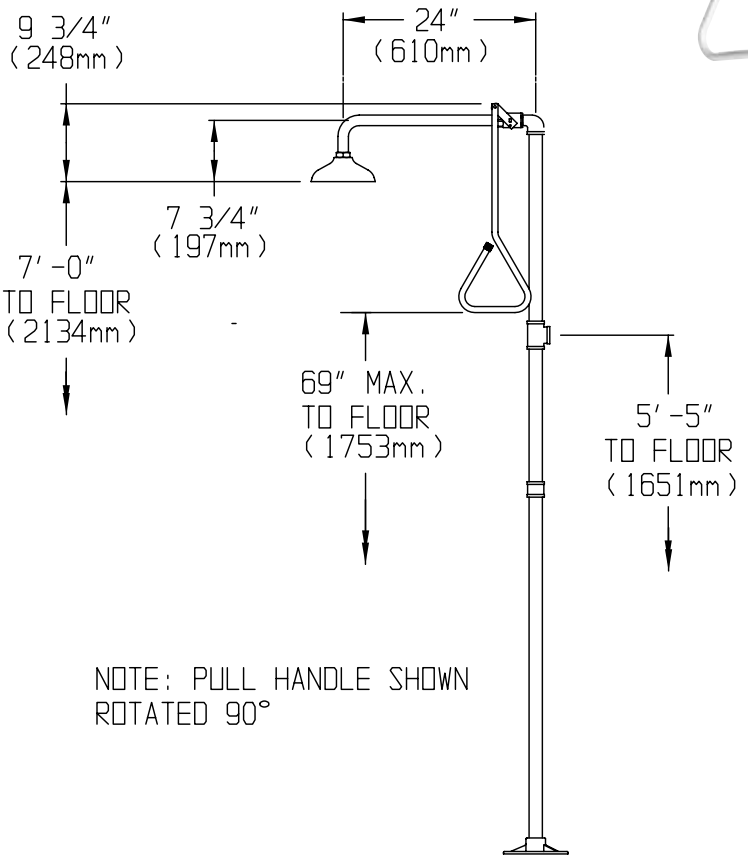

OPTIONS

- ❑ BH Brass showerhead
- ❑ FLW Flow switch
- ❑ HS Hand-held spray
- ❑ SCV Self-closing valve
- ❑ SPR Stainless steel pull rod
- ❑ SSBV Stainless steel ball valve
- ❑ SSH Stainless steel showerhead
- ❑ XPR Extended aluminum pull rod

Job Name_____

Location_____

Architect/Engineer _____

Sales Representative _____

Wholesaler _____

Date_____ Model #_____

P.O. Box 191, Wilmington, DE 19899-0191 USA
1-800-537-2107 Fax: 1-800-977-2747
www.speakmancompany.com

Revision Date
NOV. 2007