SPEAKMAN® SB-2421

Kubos™ Widespread Faucet

FEATURES:

- Lead-free brass construction
- Two lever handles
- 1.2 gpm (4.5 L/min) flow rate
- 1/4 turn ceramic cartridges
- Quick connect fittings
- Includes pop-up drain assembly

COMPLIANCE:

- ASME A112.18.1/CSA B125.1 certified
- NSF 61 certified
- WaterSense certified
- NSF 372 certified
- Meets ADA

FINISH:

PC

BN

WARRANTY:

- Limited Lifetime Warranty (consumer use)
- 1 Year Limited (commerical use)

DIMENSIONS:

NOTE: 1. All dimensions are in inches (millimeters) unless otherwise specified and are subject to change without notice.

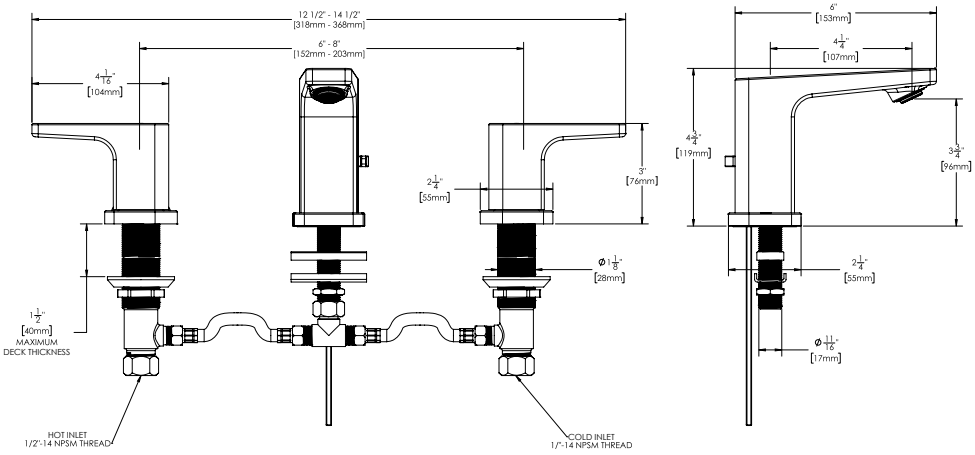

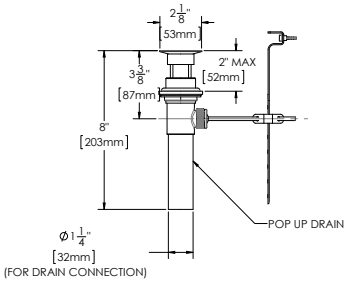

Architect/Engineer Approval Space:

SPEAKMAN
400 ANCHOR MILL ROAD
NEW CASTLE, DE 19720

P: 800-537-2107
F: 800-977-2747
W: WWW.SPEAKMAN.COM
R: NOVEMBER 2017

Management Systems Registered to ISO 9001