EDENTON

ROMAN TUB DIVERTER WITH HANDSHOWER

SKU: 948681

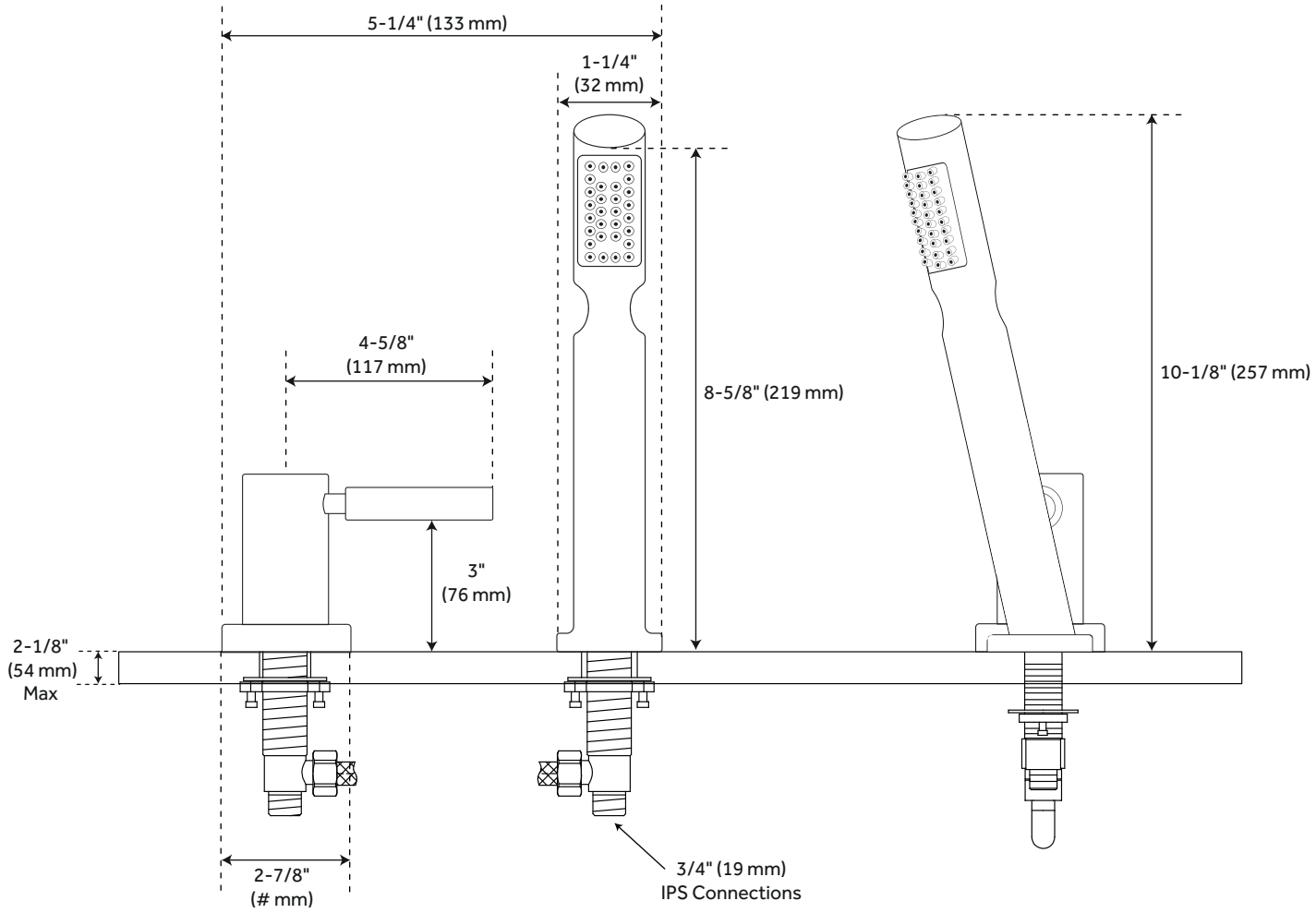

FEATURES

Hand shower hose length: 61"
Ceramic disc cartridges.
Hand shower flow rate: 1.75 gpm.
Length: 5-1/4"
Height: 10-1/8"

CODES/STANDARDS

cUPC
ASME A112.18.1/CSA B125.1
ASME A112.18.3
WaterSense
CALGreen
Massachusetts Accepted"

SIGNATURE HARDWARE LIFETIME WARRANTY

See website for warranty information

REVISED 12/06/2019
Code: SHED2RTDGCP
SHED2RTDGBN

All dimensions and specifications are nominal and may vary. Use actual products for accuracy in critical situations.