COOPER

THERMOSTATIC EXPOSED PIPE SHOWER WITH HAND SHOWER

SKU: 940967

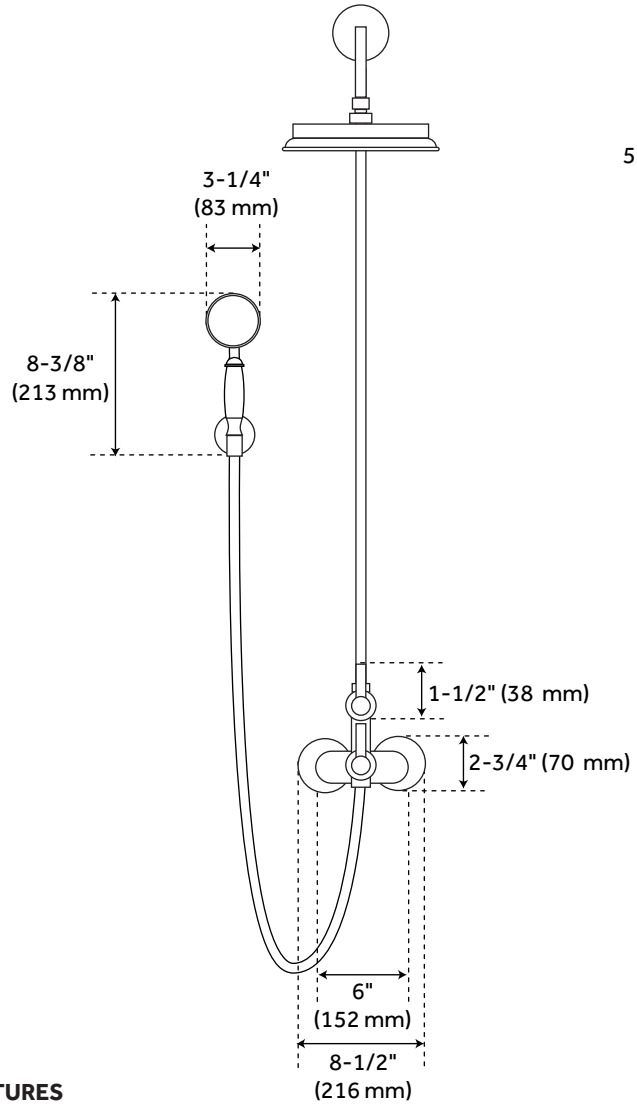

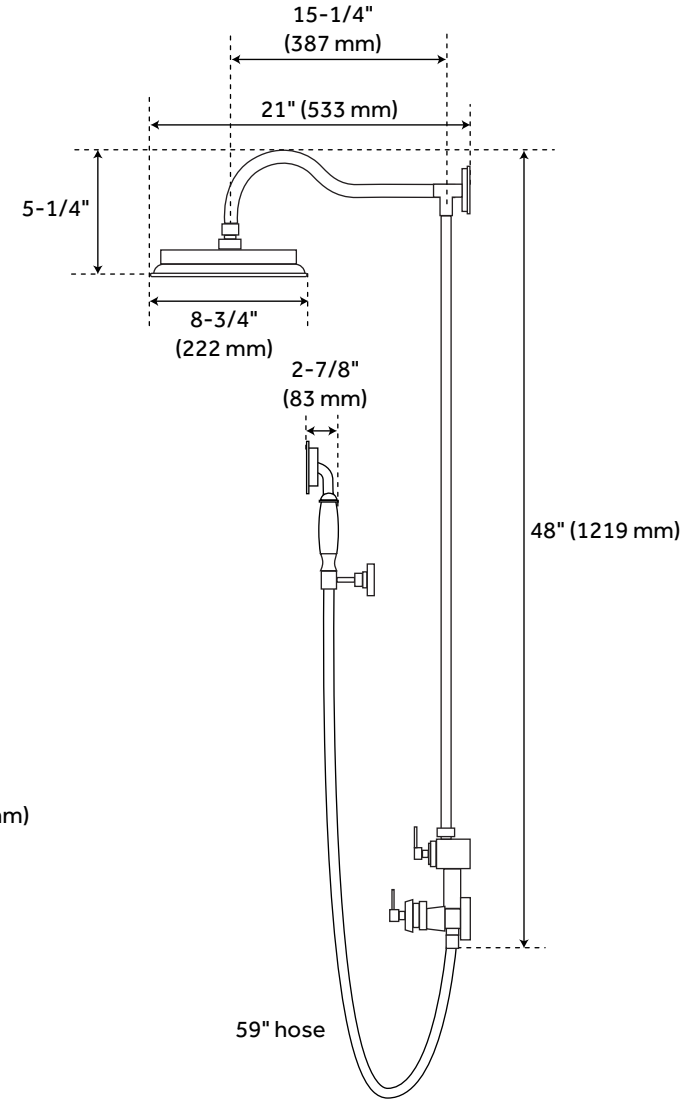

FEATURES

Material: Brass
Assembly Required: Yes
Base Plate Height: 2-3/4"
Base Plate Width: 2-3/4"
Shower Head Diameter: 8-3/4"
Shower Arm Extension: 15-1/4"
Shower Arm Height: 5-1/4"
Shower Head Swivel: No
Hand Shower Material: Brass
Water Connection Included: Yes

SIGNATURE HARDWARE LIFETIME WARRANTY

See website for warranty information

REVISED 02/06/2019