1/29/13

SEDONA BY LYNX
L500 GRILL
WITH CABINET
DIMENSIONS SHOWN

TOP VIEW

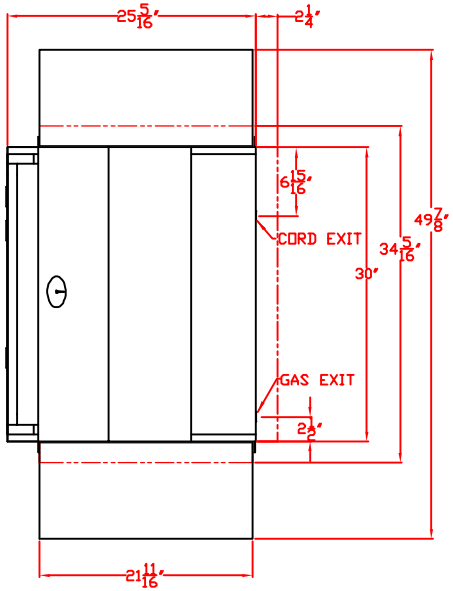

FRONT VIEW

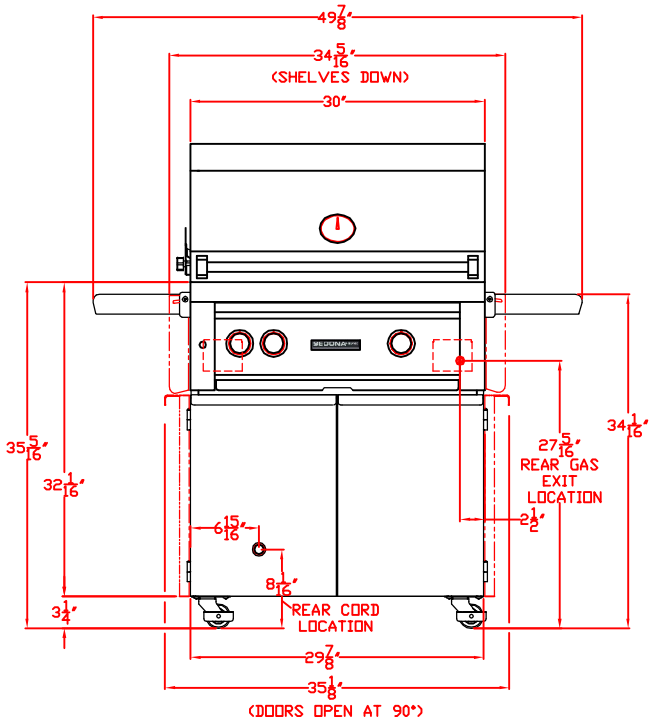
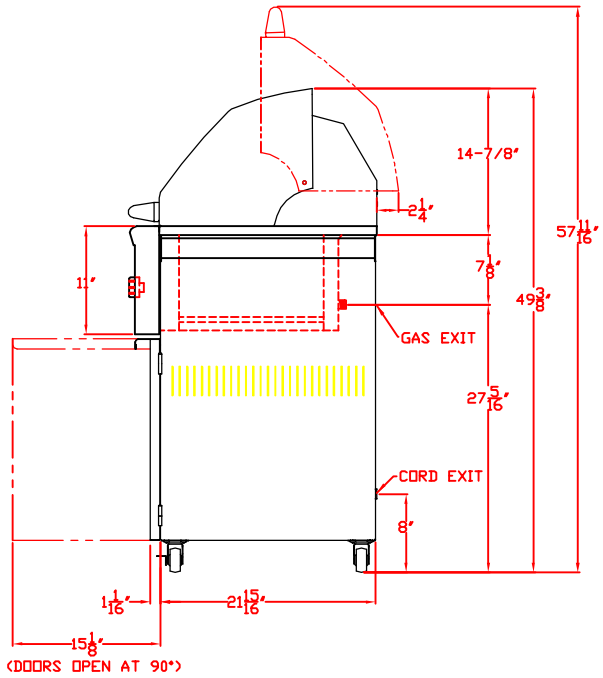
RIGHT SIDE VIEW