Scotsman
The Ideal Ice

DRC033 - 30 lb Gourmet Clear Ice Machine

DRC033 – 30 lb Gourmet Clear Ice Machine

Legacy Under-Counter Gourmet Ice Machine



Features

- 15" cabinet width
- Produces up to 30 lbs. of gourmet ice in 24 hours
- Maintains ideal bin capacity with automatic shut-off and restart
- Accepts custom wood panels to match your decor
- Aluminum door with brushed stainless steel finish and matching exposed door frame
- Available with built-in drain pump
- Available in stainless steel finish only
- Field reversible door
- Stainless wrap-around door with towel bar handle available as an accessory (KSS model)

INDOOR ONLY

24 Hour Ice Production & Storage Capacity

70ºF/21ºC Air 50ºF/10ºC Water lb / kg	90ºF/32ºC Air 70ºF/21ºC Water lb / kg	Bin Storage Capacity lb / kg
30 / 13.6	16 / 7.2	26 / 12

- Units installed in regions of extreme weather conditions may not reach production capacities.
- Units installed in elevations greater than 6,000 feet or 1,800 meters above sea level require an altitude adjustment to maintain proper ice level.

c UL us CERTIFIED ISO 9001:2015 DESIGNED ENGINEERED ASSEMBLED IN USA





Gourmet Clear Ice



Gourmet Cube
1" x 1⅛" x 1¼"
(2.54 x 2.86 x 3.18 cm)

Large, slow-melting ice form, ideal for beverages.

Warranty

- 1 years parts and labor on all components.
- 5 years parts on the compressor only.

Warranty valid in North America.

Scotsman
The Ideal Ice®

DRC033 – 30 lb Gourmet Clear Ice Machine

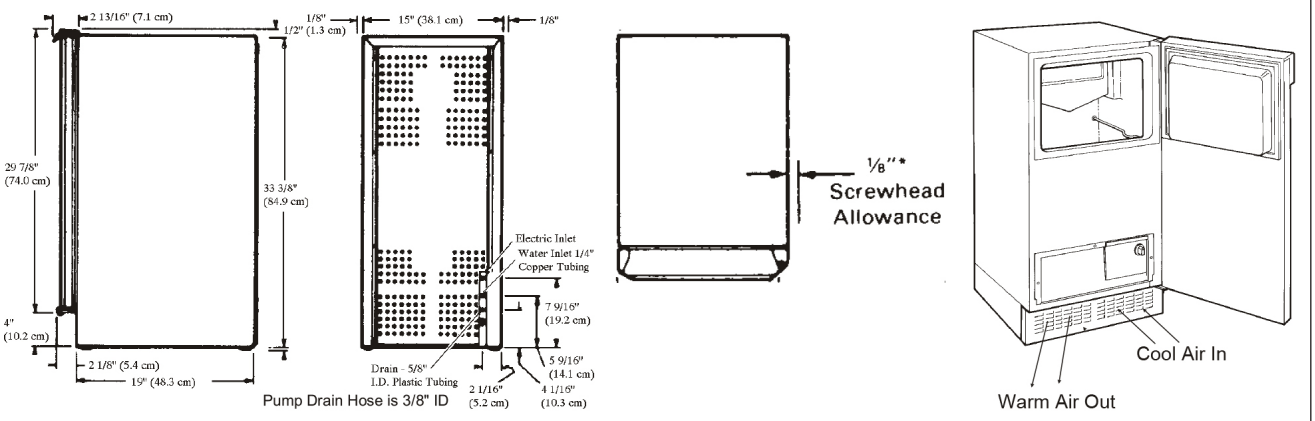

- Water supply line not included.
- Pump model: 3/8" drain line "included"
- Gravity model: 5/8" drain line "field supplied"

All Models

24 Hour Ice Production:
(70º Air/50º Water) 30 lb / 13.6 kg
(90º Air/70º Water) 16 lb / 7.2 kg

Bin Storage Capacity: 26 lb / 12 kg

Condenser Type: Air

Basic Electrical: 15a dedicated circuit required
(Volts/Hz/Phase) 115/60/1

Amps: 3.6

Maximum Fuse Size: 15

Refrigerant: R290

Dimensions (W x D x H):
Unit (without legs adjusted):
15" x 22.8125" x 33.875"
(38.1 x 57.94 x 86.04 cm)

Shipping Carton: 18" x 28" x 38"
(45.7 x 71.1 x 96.5 cm)

Specifications

	Model	Finish Cabinet / Front	Drain Type	Shipping Weight lb / kg
Indoor	DRC033GA-1SSD	Stainless Steel / Aluminum	Gravity	83 / 38
	DRC033PA-1SSD	Stainless Steel / Aluminum	Pump	88 / 40

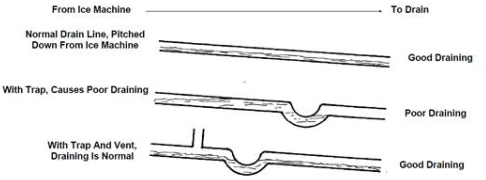

EXAMPLES OF GRAVITY DRAIN TUBE INSTALLATIONS

DRC033G: Gravity flow drain tube
DRC033P: Built-in pump to expel drain water which includes 10' drain tube

Accessories

Model	Description	Shipping Weight lb / kg
KHAND	Custom Handle Trim Piece (Top)	1 / 0.45
KSS	Wrap Around Stainless Steel Door Sleeve Kit	12 / 5.5
SS-33	Stainless Steel Front Panel Kit	9/4
19-0653	Clear One Concentrated Scale Remover	

Operating Requirements

	Minimum	Maximum
Air Temperatures	50°F (10°C)	100°F (38°C)
Water Temperatures	40°F (4.4°C)	90°F (38°C)
Water Pressures	20 PSIG (1.4 bar)	80 PSIG (5.5 bar)
Electrical Voltage	-10%	+10%

Machine requires voltage indicated on the rating nameplate. Scotsman SRC065 and SRN110 models are approved for outdoor installations. All products must operate where air temperature does not fall below 50ºF and does not exceed 100ºF. Extended periods of operation at temperatures exceeding these limitations constitute misuse under the terms of Scotsman Manufacturer's Limited Warranty, resulting in a loss of warranty coverage. Failures caused by improper installation are not considered factory defects. Refer to owner's manual for all installation requirements. Please note: when installed in a corner, the door swing may be limited due to handle contact with the wall or cabinet face.

© 2025 Scotsman Ice Systems.

WELBILT
an Ali Group Company