ROSETO

W5"E5"H15.5" L1

Installation instructions:

1. Black wire from ceiling(junction box) attaches to "L"wire from the fixture.
2. White wire from ceiling(junction box) attaches to "N"wire from the fixture.
3. "E" wire from the fixture is attaced to the mounting bracket and an additional "E" wire from the mounting bracket must be secured to the junction box.
4. Secure mounting bracket to the junction box.
5. Insert screws（P2） in side of top unit the mounting bracket.
6. Put the canopy (P3) on the mounting bracket(P1) and use the screw(P4) to screw tighten.
7. Install E12 light source,no include bulb.
8. Install the shade (P13) to the bulb.

The end!

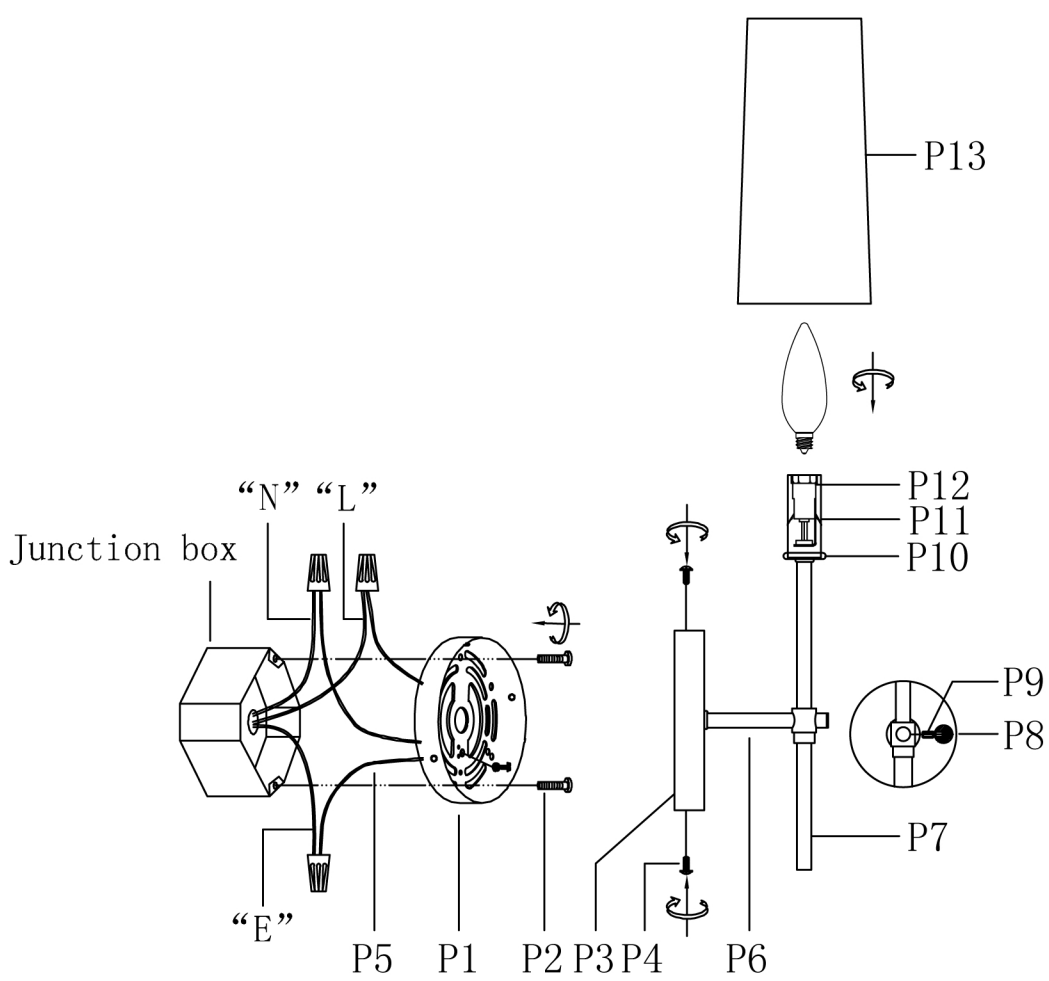

"L" = Hot wire
"N" = Neutral wire
"E" = Ground wire

PARTS LIST

part	picture	Description	Qty	Check list
P1		D4.3" Mounting bracket	1	
P2		5/32-32 Screw	2	
P3		D4.75" Canopy plat	1	
P4		Screw	3	
P5		Power Cord L2' 1332 18AWG Black&White	1	
P6		W3.65"*L5.25" Arm	1	
P7		L3.65" Decorative tube	1	
P8		Cap nut	1	
P9		Screw	1	
P10		Check ring	1	
P11		D0.87"*L2.1" Candle cover	1	
P12		E12 Socket	1	
P13		D3.5"*H7.5" Lamp shade	1	