REGINA ANDREW

DETROIT

SPECIFICATION SHEET

Lyrical Mirror
21-1163

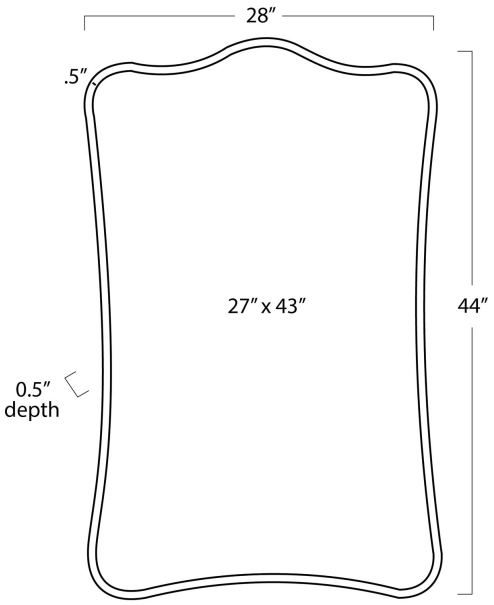

HEIGHT	44
WIDTH	28
DEPTH	0.5
INNER MIRROR DIM	27 x 43
FRAME WIDTH	.5
NOTES	Not suitable for bathroom use.
FREIGHT ONLY	No