52" CEILING FAN

Owner's Manual

Model #50759

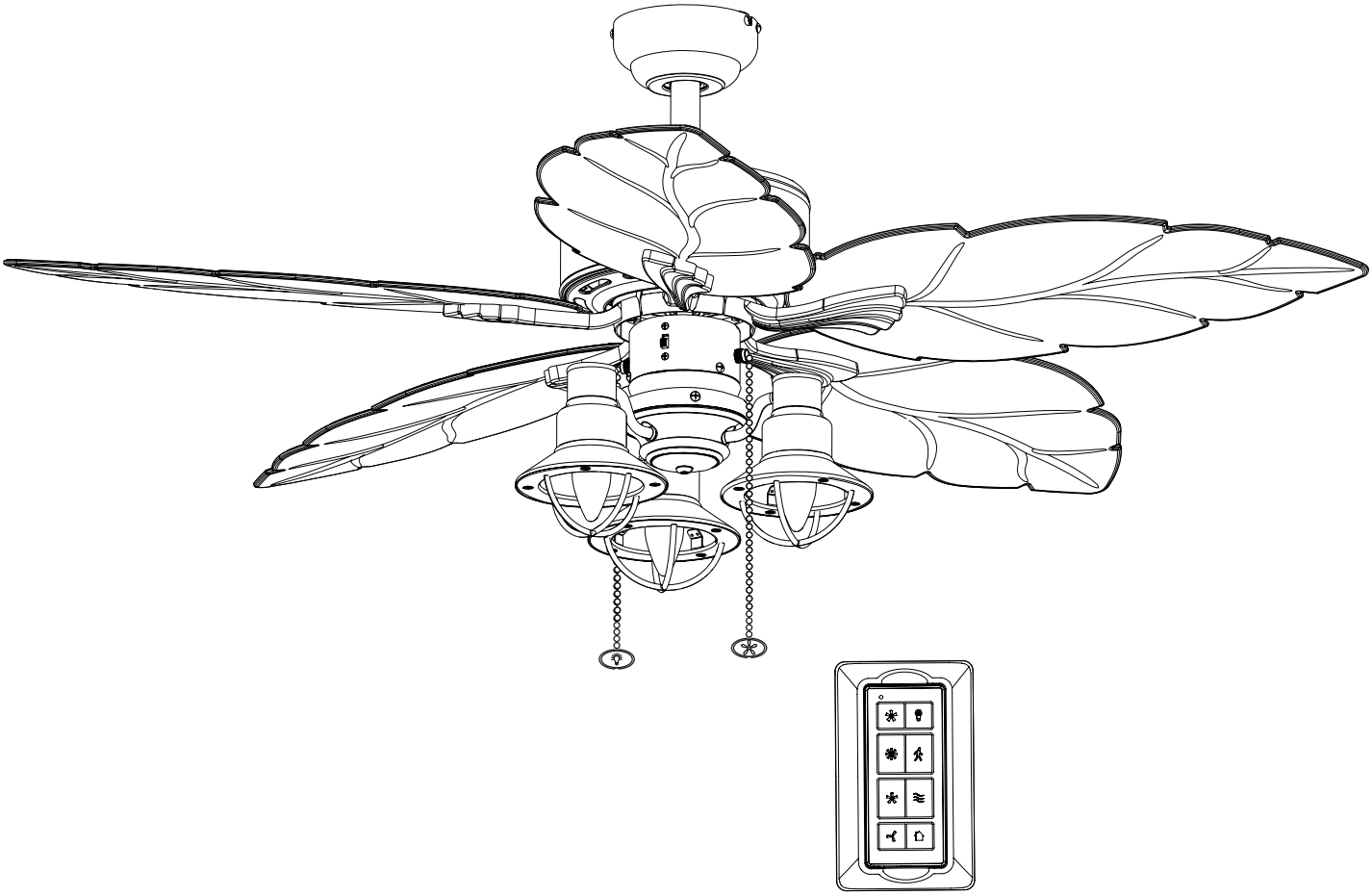

Intertek

To obtain service, please contact the Service Department:
1-877-706-3267, 8 a.m.-5 p.m. Central, Monday-Friday.

PACKAGE CONTENTS

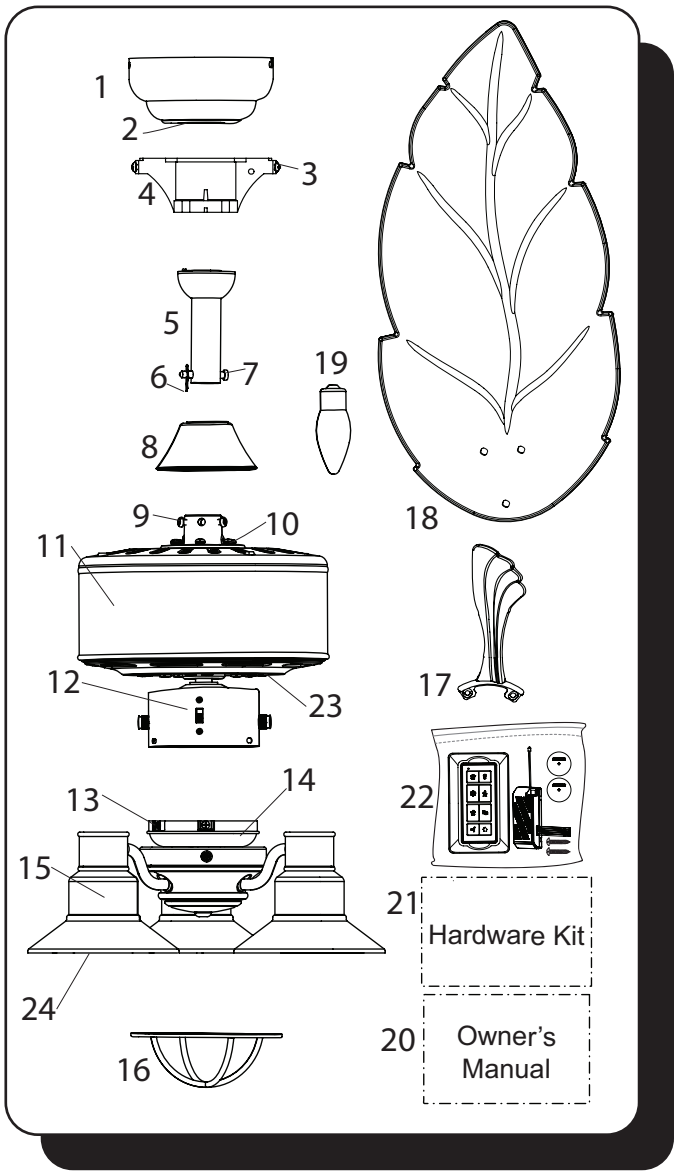

Unpack your fan and check the contents. You should have the following items:

PACKAGE CONTENTS

1. Canopy
2. Canopy Cover
3. Mounting Bracket Screw (x4)
4. Mounting Bracket
5. Downrod
6. Downrod Clip
7. Downrod Pin
8. Yoke Cover
9. Set Screw (x2)
10. Closemount Screw (x3)
11. Motor Assembly
12. Switch Housing
13. Switch Housing Screw (x3)
14. Switch Housing Cap
15. Light Kit
16. Light Cage (x3)
17. Blade Arm (x5)
18. Blade (x5)
19. E26-base LED Bulb (x3)
20. Owner's Manual
21. Hardware Kit
22. Remote Pack
23. Motor Screw (x10)
24. Light Cage Screw (x12)

HARDWARE CONTENTS

25. Blade Screw (x15)
26. Blade Washer (x15)
27. Wire Connector (x6)
28. Pull Chain Extension (x2)
29. Secondary Support Screw
30. Support Washer
31. Secondary Spring Washer
32. Blade Balancing Kit
33. Blade Spring Washer (x15)

Note: Some extra hardware has been included. The quantity listed above is the number required for installation.

HARDWARE CONTENTS

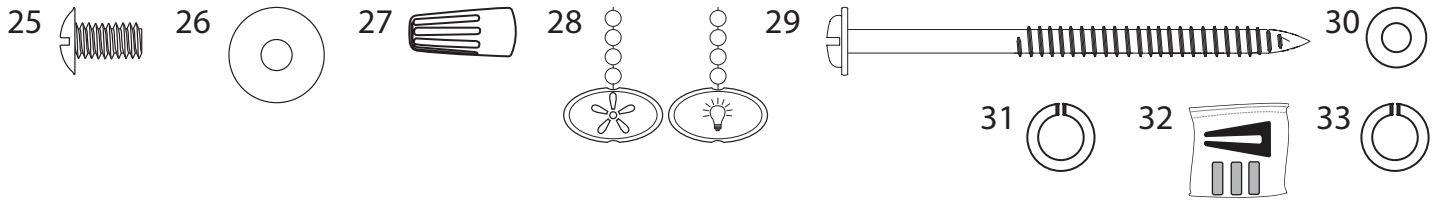

TOOLS REQUIRED (not included)

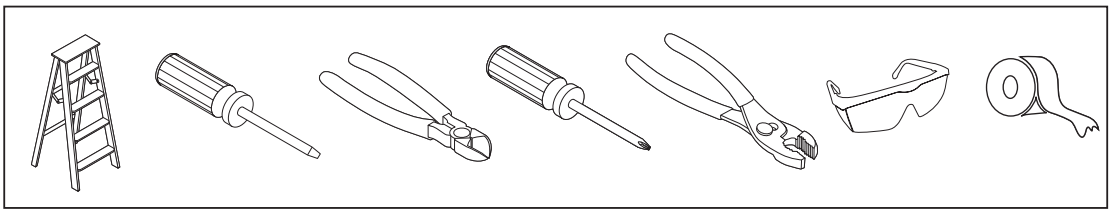

Tools required for assembly: Electrical tape, Phillips Screwdriver, Pliers, Safety Glasses, Step Ladder, Wire Cutters and Wire Strippers

Helpful Tools: AC Tester Light, Tape Measure, and Wiring Handbook

DIMENSION REFERENCE

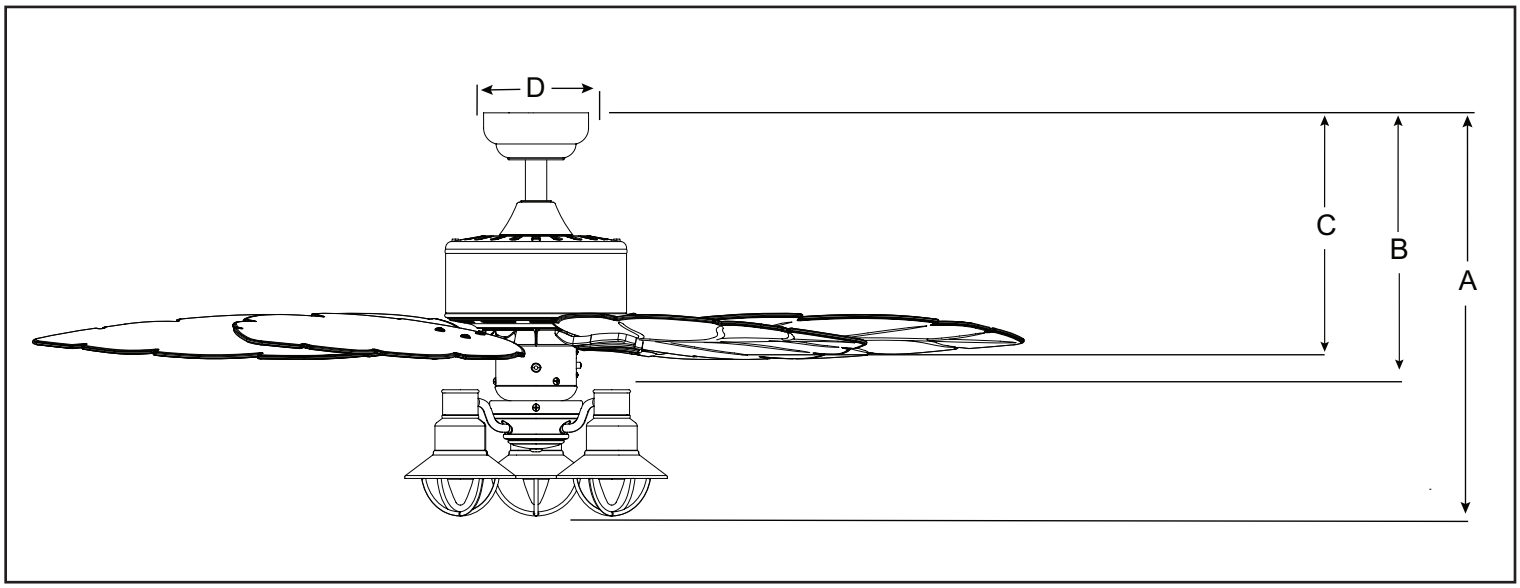

A. 19.62 in. B. 14 in. C. 11.94 in. D. 5.13 in.

MOUNTING OPTIONS

Three Mounting Options

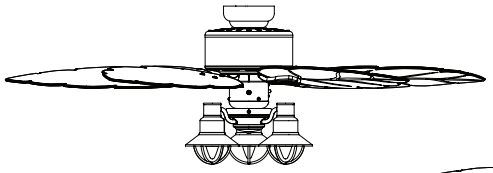

Closemount

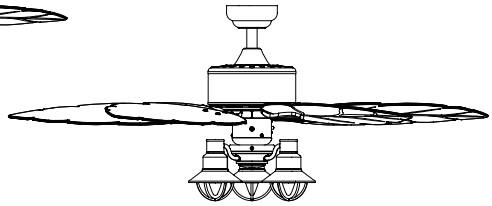

Downrod Mount

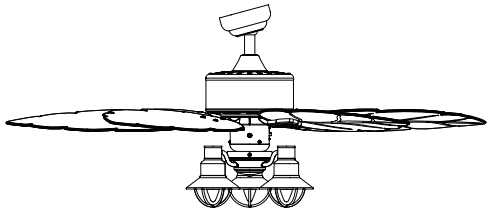

Angled Ceiling Mount (Up to 10 degrees)

Choose one of the following mounting options:

Closemount method is best suited for ceilings lower than 8 feet. It does not utilize the downrod.

Downrod Mount is best suited for ceilings 8 ft. or higher. For taller ceilings you may want to use a longer downrod (not included).

Angled Ceiling Mount is best suited for angled or vaulted ceilings. A longer downrod is sometimes necessary to ensure proper blade clearance from the ceiling. If using the angle mount, check to ensure the ceiling angle is not steeper than 10°.

SAFETY INSTRUCTIONS

READ ALL SAFETY INFORMATION AND INSTALLATION INSTRUCTIONS BEFORE YOU BEGIN INSTALLING THE FAN AND SAVE INSTRUCTIONS.

CAUTION:

- All set screws of the fan must be checked and retightened where necessary before installation.
- To reduce the risk of personal injury, do not bend the blade brackets when installing the brackets, balancing the blades or cleaning fan. Do not insert foreign objects in between rotating fan blades.
- Before changing the fan direction, turn off the fan and wait for the fan blades to stop completely.
- The safeguards provided by these safety instructions and by the separate installation instructions are not meant to cover all possible conditions and situations that may occur. It must be understood that common sense, caution and care are factors which can not be built into this product. These factors must be supplied by the person(s) installing, caring for and operating the fan.
- The fan weight is Net Weight: 22.68 lbs (10,31 kg). Be sure the outlet box (not included) is securely attached to the building structure and is marked "Acceptable For Fan Support". Failure to do so can result in serious injury.
- CAN ICES-005 (B) / NMB-005 (B)
- This device complies with part 15 of the FCC Rules. Operation is subject to the following two conditions: (1) This device may not cause harmful interference, and (2) this device must accept any interference received, including interference that may cause undesired operation.
- This equipment has been tested and found to comply with the limits for a Class B digital device, pursuant to Part 15 of the FCC Rules. These limits are designed to provide reasonable protection against harmful interference in a residential installation. This equipment generates, uses and can radiate radio frequency energy and, if not installed and used in accordance with the instructions, may cause harmful interference to radio communications. However, there is no guarantee that interference will not occur in a particular installation. If this equipment does cause harmful interference to radio or television reception, which can be determined by turning the equipment off and on, the user is encouraged to try to correct the interference by one or more of the following measures:

  --Reorient or relocate the receiving antenna.

  --Increase the separation between the equipment and receiver

  --Connect the equipment into and outlet on a circuit different from that to which the receiver is connected.

  --Consult the dealer or an experienced radio/TV technician for help.

  Please note changes or modifications not expressly approved by the party responsible for compliance could void the user's authority to operate the equipment.

HKC-US
3350 Player's Club Parkway, #225
Memphis, TN 38125
1-877-706-3267

WARNING:

- To avoid risk of electric shock, be sure to shut off power at the main fuse or circuit breaker box before installing or servicing this fixture. Turning off the electrical power by using the light switch is not sufficient to prevent electrical shock.
- To reduce the risk of injury, install the fan so that the blades are at least 7 feet (2.1 Meters) above the floor and at least 18 inches (0.5 Meters) from the tip of the blades to the wall.
- To reduce the risk of fire, electric shock, or personal injury, mount to outlet box marked "acceptable for fan support" and use mounting screws provided with the outlet box.
- The installation has to be in accordance with the national electrical code, ansi/nfpa 70-1999 and local codes. If you are unfamiliar with the methods of installing electrical wiring, seek the services of a qualified licensed electrician.
- Using a full-range dimmer switch to control fan speed will cause a loud humming noise from the fan. To reduce the risk of fire or electric shock, do NOT use a full-range dimmer switch to control the fan speed.

ASSEMBLY INSTRUCTIONS

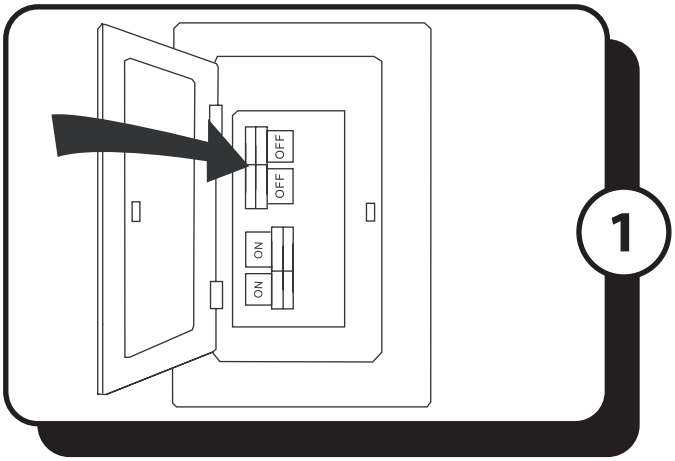

1.Turn OFF the electrical power at the main fuse or circuit breaker.

DANGER: Failure to disconnect the power supply prior to installation may result in serious injury or death.

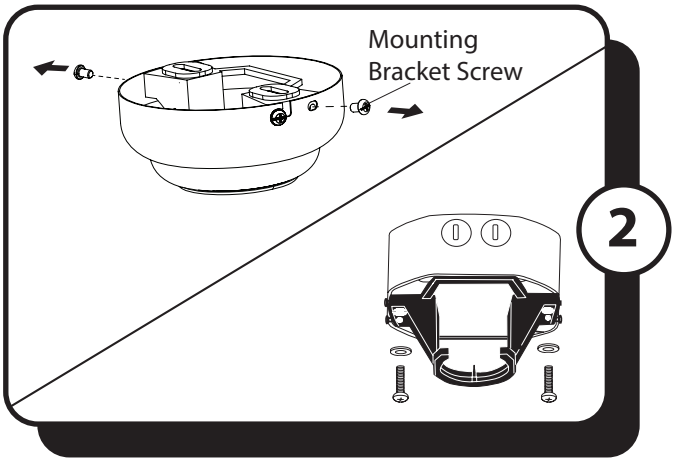

2. Remove the mounting bracket by removing the two mounting bracket screws from the round holes in the canopy. Then loosen the other two mounting bracket screws from the J-shaped slots. Retain the mounting bracket screws for later. Install the mounting bracket to the outlet box (not included) using the screws and washers provided with the outlet box.

Warning: To reduce the risk of fire electric shock, or personal injury, mount to the outlet box marked "acceptable for fan support" and use the mounting screws and washers provided with the outlet box.

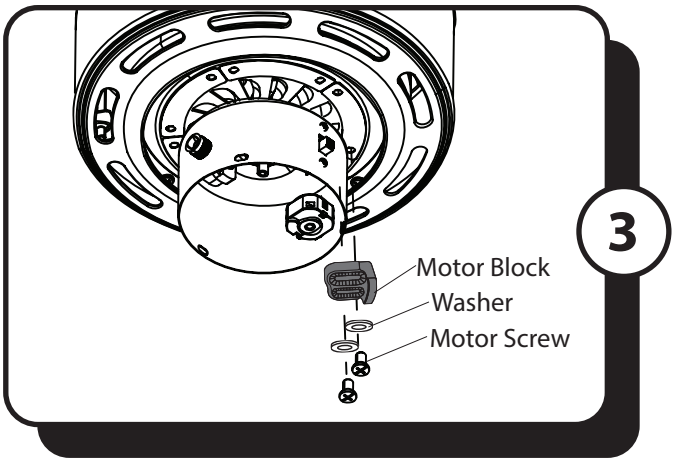

3. Remove the ten motor screws, washers, and five motor blocks from the underside of the motor. Discard the motor blocks but save the motor screws for blade arm installation.

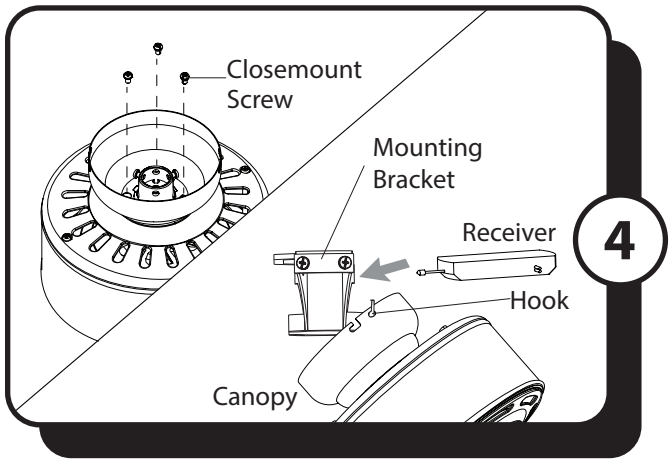

4. **CLOSEMOUNT INSTALLATION** (Optional) -
a. Remove the three Phillips-head closemount screws from the top of the motor assembly.
b. Remove the canopy cover from the bottom of the canopy.
c. Align the holes in the bottom of the canopy with the screw holes in the top of the motor assembly. The larger holes in the canopy will encompass the three pre-installed screws.
d. Secure the canopy to the top of the motor assembly with the three closemount screws.
e. Hang the fan on the hook of the mounting bracket.
f. Place the receiver in the mounting bracket to prepare for the wiring process.

Proceed to Step 10.

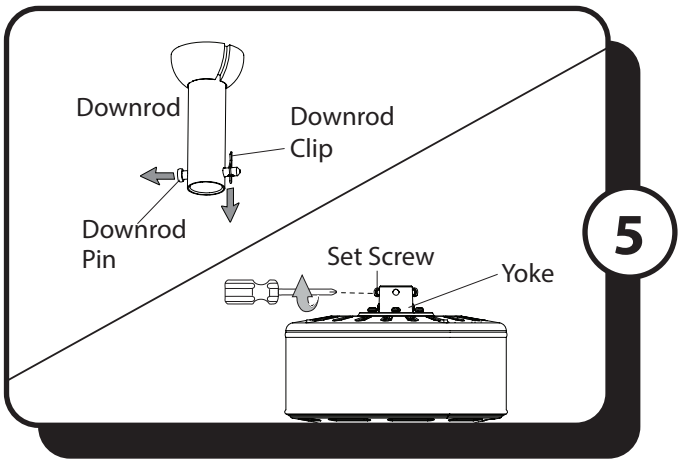

5. **DOWNROD MOUNT** - Remove the downrod clip and downrod pin from the downrod. Then, loosen but do not remove the two set screws at the top of the yoke.

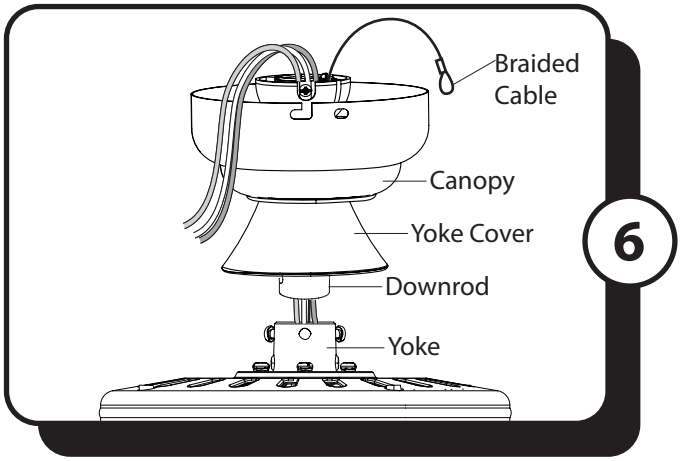

6. Feed the wires and braided cable coming from the yoke through the yoke cover, canopy and downrod.

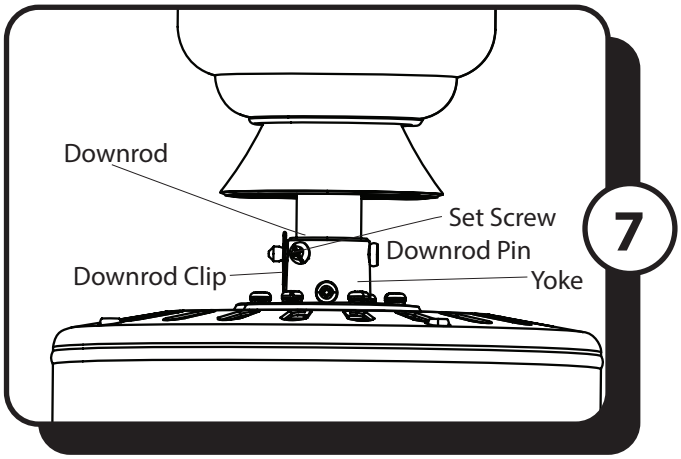

7. Insert the downrod into the yoke and reinstall the downrod pin and downrod clip. Then retighten the two set screws.
Note: With wiring extending out of the downrod, measure 8 inches of lead wire and cut the excess wire with wire cutters (not included). Then strip 1/2" of insulation from the end of each wire. Do not cut braided cable.

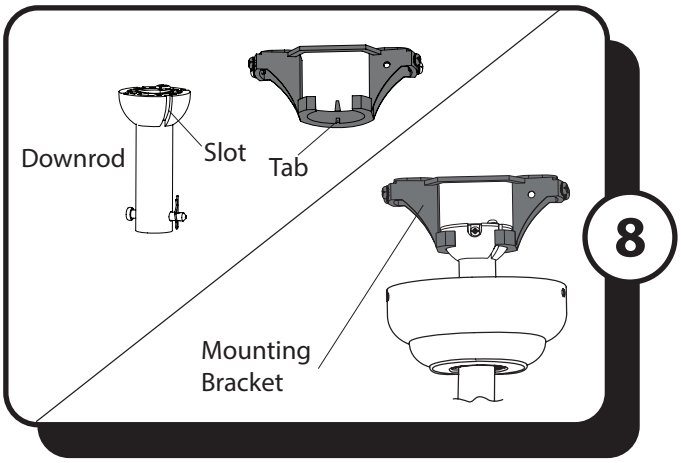

8. Lift the downrod into the mounting bracket. Rotate the downrod until the tab in the mounting bracket is seated in the slot in the downrod ball.
WARNING: The fan and/or downrod should not rotate in the mounting bracket, if installed correctly. Failure to align the slot in the downrod ball with the tab on the mounting bracket may result in fan falling causing serious injury or death.

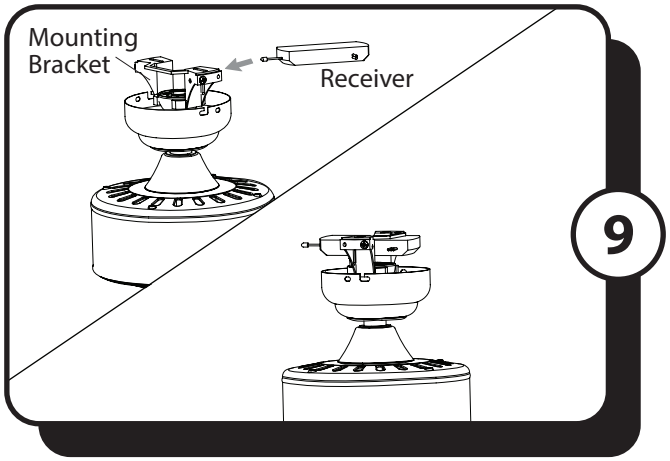

9. Place the receiver in the mounting bracket with flat side up to prepare for the wiring process.

Note: The receiver will rest directly on top of the downrod.

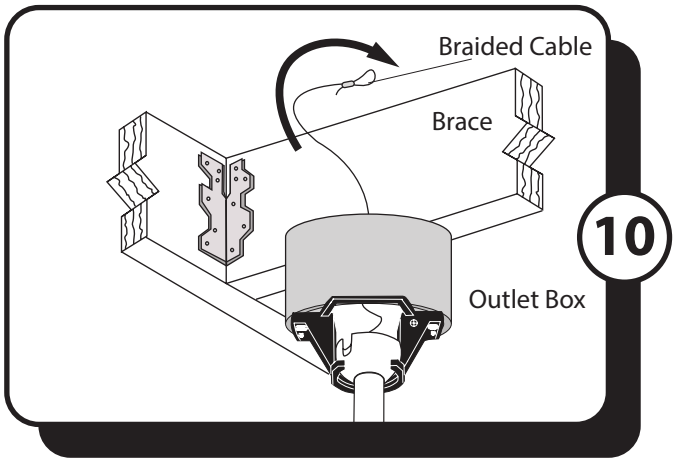

SECONDARY HANGING SYSTEM

For installation in the United States: Building codes in the U.S.A. do not require installation of a Secondary Hanging System. If desired, the braided cable can be cut and removed using wire cutters (sold separately). *Skip to Step 13*.

For installation in Canada: In compliance with building codes in Canada, installation of the Secondary Hanging System is required.

10. Feed the loop of the braided cable, preassembled to the motor assembly, up through the outlet box mounted in the ceiling.

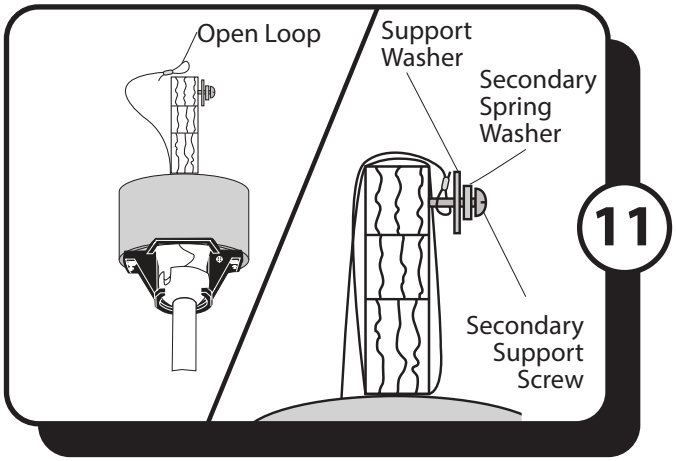

11. Install secondary support screw, secondary spring washer, and support washer partly into the side of the brace installed in the ceiling. Then lift the braided cable up and over the ceiling brace and place the open loop of the braided cable around the secondary support screw.
Note: The ceiling support brace may not be accessible from below. If not, it must be accessed from above.
Important: The braided cable must make a complete circle around the support brace to secure the fan.

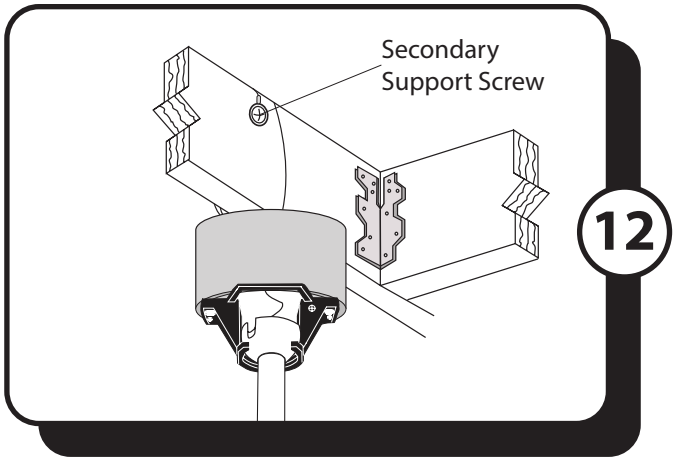

12. Tighten the secondary support screw securing the braided cable.

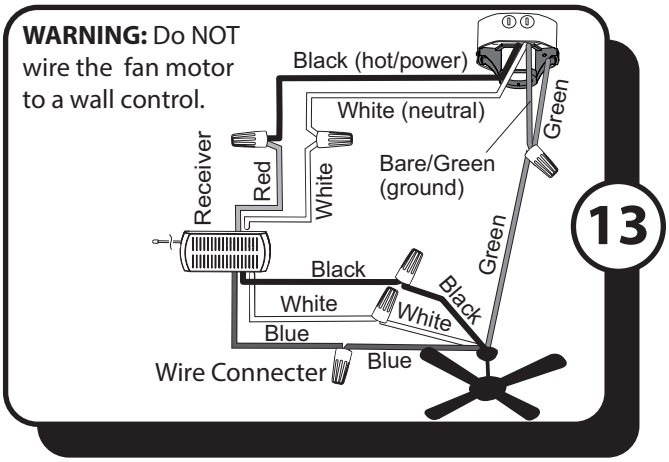

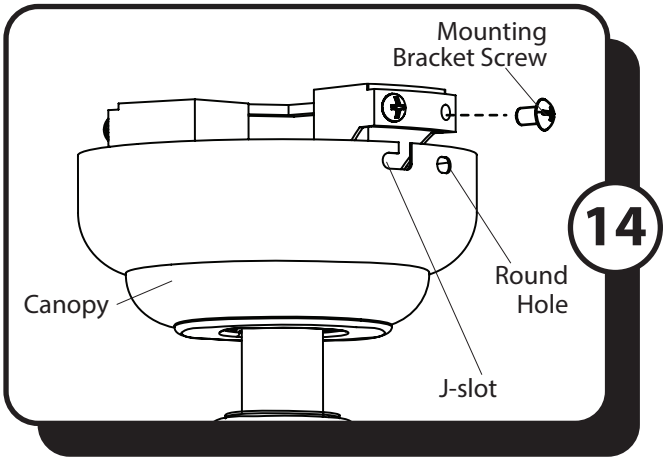

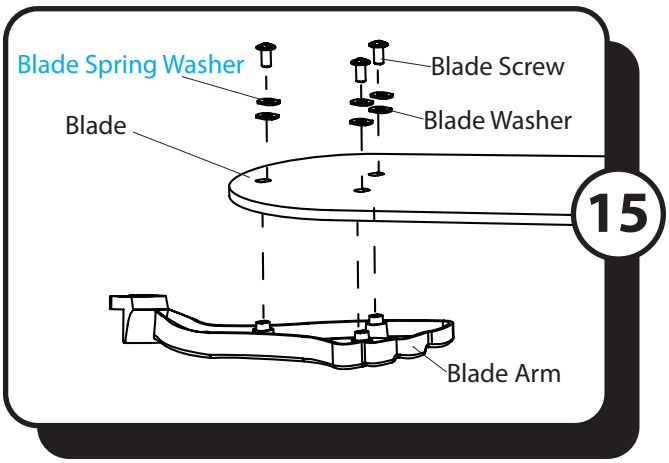

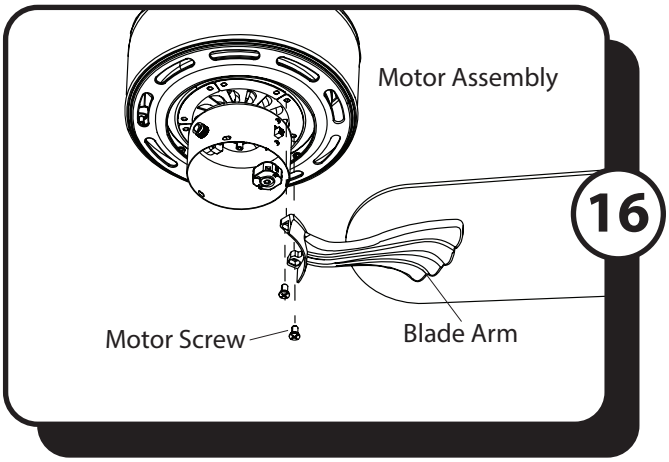

13. Use wire connectors to connect the receiver and fan wires to the supply wires from outlet box according to the wiring diagram and the following instructions:

- Connect the blue wire from receiver to blue (light power) wire from fan.
- Connect the black wire from receiver to black (fan power) wire from fan.
- Connect the red wire from receiver to black (hot/power) supply wire.
- Connect the white wire (with red label) from receiver to white (neutral/common) supply wire.
- Connect the white wire (with white label) from receiver to white (neutral/common) wire from the fan.
- Connect the green wires from the fan and mounting bracket to the bare/green (ground) supply wire. **Note:** The downrod is not used for closemount installation, so there will only be two green wires to connect.

Important: After the connections have been made, the connected wires should be turned upward and pushed carefully up into the outlet box. Place the black and white wire connections on opposite sides of the outlet box.

14. Align the canopy over the loosened mounting bracket screws. Place the J-slot of the canopy onto the mounting bracket screws and rotate clockwise. Secure the canopy with the two previously removed mounting bracket screws. Tighten all the mounting bracket screws securely.

15. Partially insert the blade screws, blade spring washers, and blade washers through the blade and into the blade arm. Tighten each blade screw with a Phillips screwdriver (not included), starting with the one in the middle. Repeat this step for the remaining blades.

16. Install the blade arm to the underside of the motor assembly with previously removed motor screws. Tighten each blade arm completely before moving to the next.

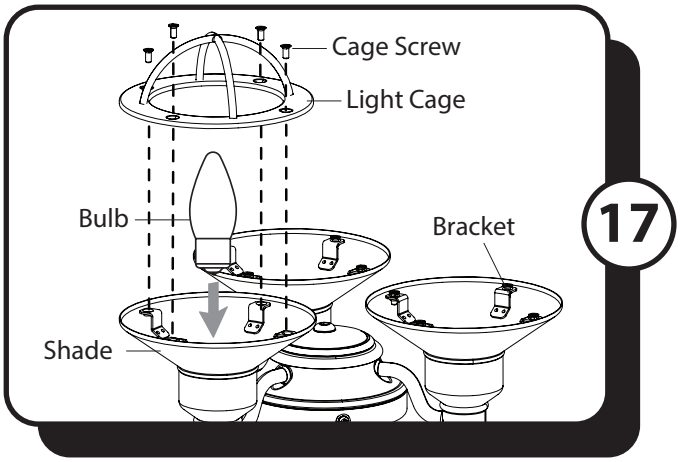

17. Remove the four cage screws from the brackets inside the shade. Install the E26-base LED bulb in the socket. Then attach the light cage to the shade using the four cage screws. Repeat for each shade.

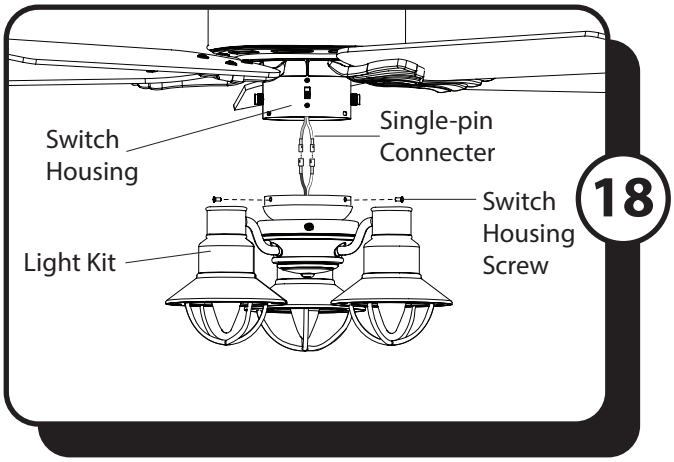

18. Remove the three switch housing screws from the top edge of the light kit. Then, connect the single-pin connectors from the switch housing to the single-pin connectors from the light kit -- blue to blue and white to white. Then, attach the light kit to the switch housing using the switch housing screws.

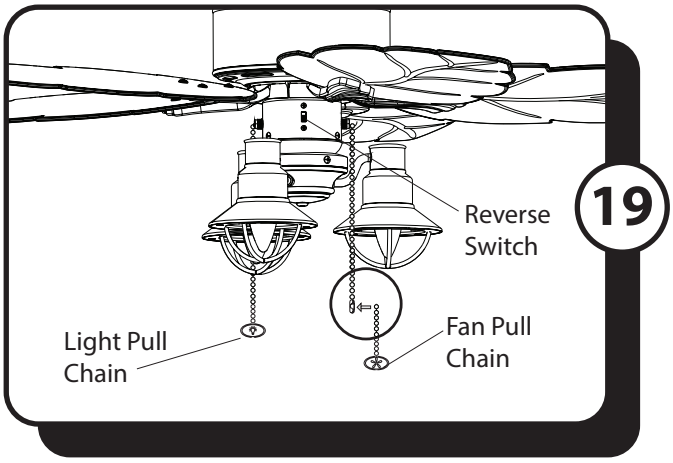

19. Attach pull chain extensions to the pull chains.

Note: When facing the reverse switch, the pull chain on the left controls the light and the pull chain on the right controls the fan.

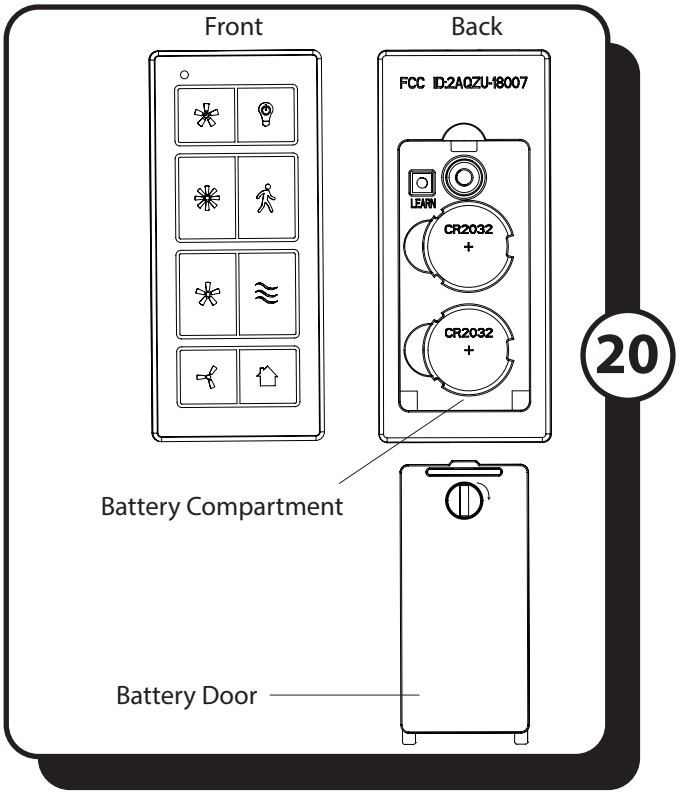

20. Remove the battery door from the back of the remote using a flat-head screwdriver (not included). Insert the two CR2032 batteries into the remote; ensure the positive pole of the batteries face up (as pictured) and then replace the battery door.

Note: Your fan and wall control/remote were synced at the factory. If the wall control does not operate the fan, see TROUBLESHOOTING, page 13.

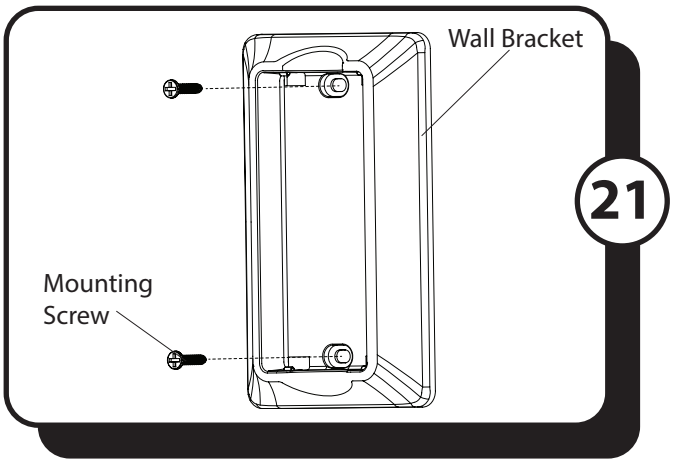

21. If desired, the Wall Bracket can be installed to the wall using the two Mounting Screws. Store the remote In the Wall Bracket when not in use.

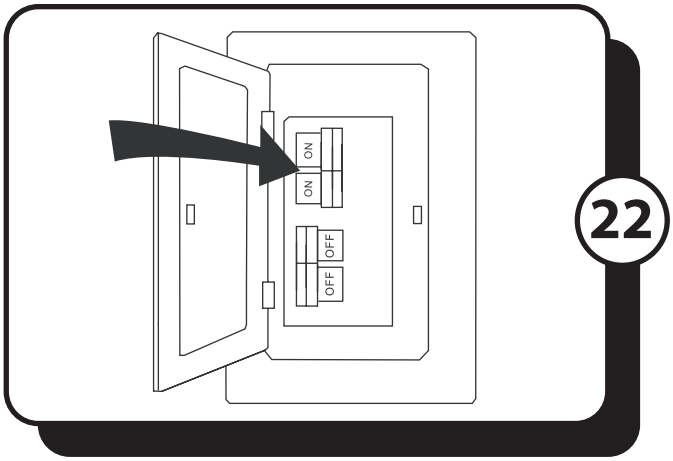

22. Turn ON the electrical power at the main fuse or circuit breaker and the wall switch.

Installation is complete.

OPERATING INSTRUCTIONS

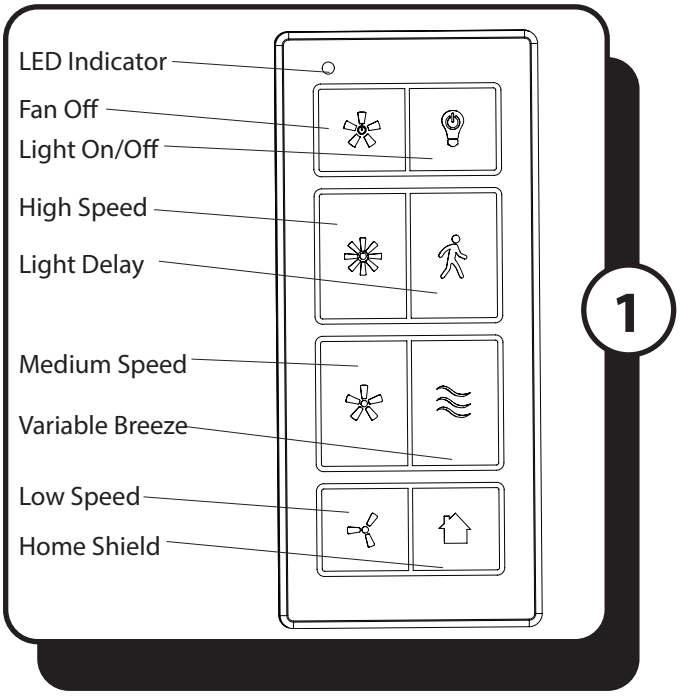

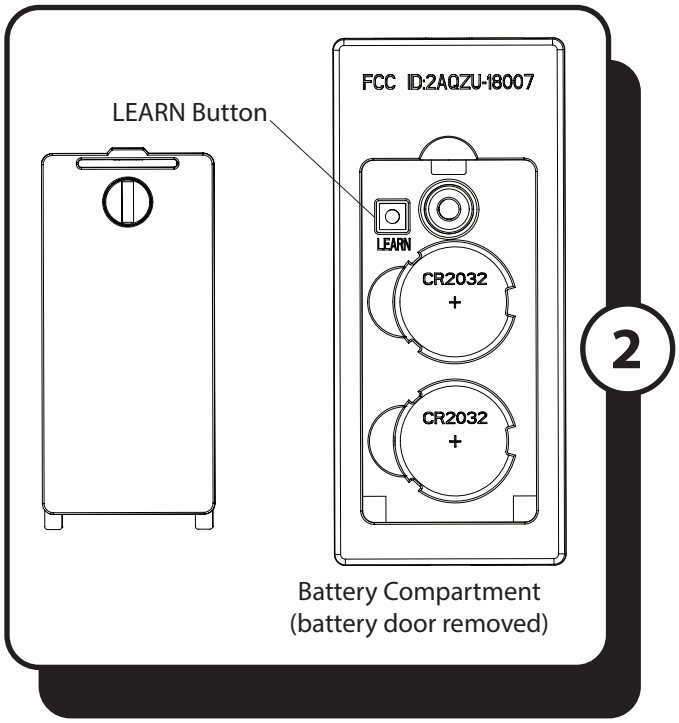

1. To operate the fan using the remote, make sure fan pull chain is on high and light is turned on. Then press and release the following buttons:

Fan Off - Turns the power to fan off.

Light On/Off - Turns the light on and off. Press and hold to dim or brighten lights (for dimmable bulbs only).

High Speed - Turns on fan at high speed.

Light Delay - Light stays on for 60 seconds to allow for safe exit from room. Tap Light Delay once to activate. Fan light blinks once to confirm Light Delay is active. Press any button to cancel.

Medium Speed - Turns on fan at medium speed.

Variable Breeze - Simulates a breeze in nature. Press and hold button to activate. Press any fan speed button to cancel.

Low Speed - Turns on fan at low speed.

Home Shield - Simulates occupancy while away from home. Fan remains off and the light randomly turns on for a minimum of five times and a maximum of 20 minutes. The light remains off for 60 minutes between events. Press and hold button to activate. Light will blink twice to confirm Home Sheild is active. Press any button to cancel.

LED indicator should illuminate when any remote button is pressed. If not, replace the DC3V, CR2032 batteries.

2. **LEARN** - Syncs remote to receiver (see TROUBLESHOOTING for instructions).

Note: To access LEARN button, remove battery door from back of the remote using a flat-head screwdriver.

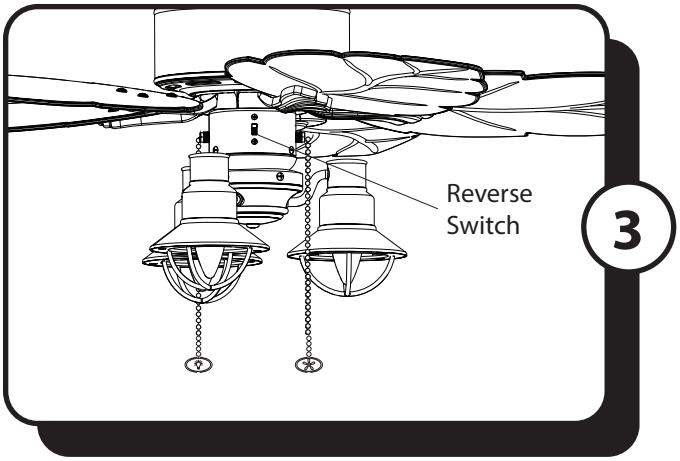

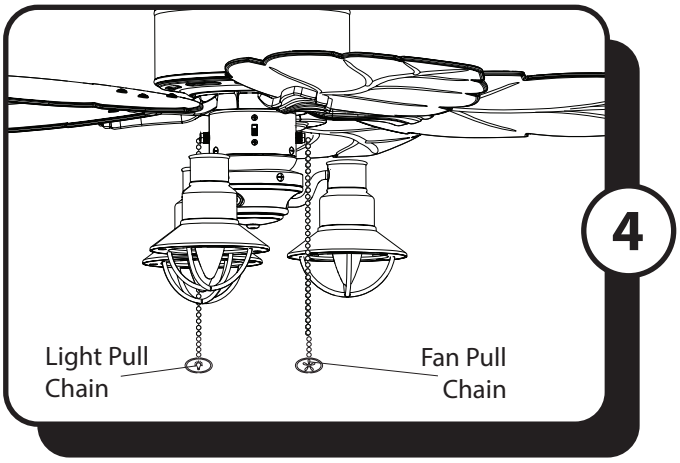

3. Using a ceiling fan will allow you to raise your thermostat setting in summer and lower your thermostat setting in winter without feeling a difference in your comfort.

In warmer weather, push the reverse switch down which will result in downward airflow creating a wind chill effect.

In cooler weather, push the reverse switch up which will result in upward airflow that can help move stagnant, hot air off the ceiling area.

Important: Wait for the fan to stop before moving the reverse switch. The reverse switch must be set either completely up or down in order for the fan to function correctly. If the reverse switch is set in the middle position, the fan will not operate.

4. The fan pull chain has four positions to control fan speed. One pull is HIGH, two is MEDIUM, three is LOW and four turns the fan OFF. The light pull chain turns the light ON and OFF.

Important: Remember, if using the remote, do not change fan speed or turn off light. To operate the fan using the remote, set fan speed to high and to turn the light (if applicable) on.

TROUBLESHOOTING

If you have difficulty operating your new ceiling fan, it may be the result of incorrect assembly, installation or wiring. In some cases, these installation errors may be mistaken for defects. If you experience any faults, please check the Troubleshooting section below. If a problem cannot be remedied or you are experiencing difficulty in installation, please contact the Service Department: 1-877-706-3267, 8 a.m.-5 p.m. Central, Monday-Friday.

PROBLEM	SUGGESTED REMEDY

WARNING: To reduce the risk of fire, electrical shock or personal injury, shut off the power supply to fan before you begin any maintenance tasks.

1. Fan does not start:	1. Make sure that the wall switch is turned ON. 2. Check main and branch circuit fuses or circuit breakers. 3. Check all wire connections from household supply wires to the fan. 4. Make sure forward/reverse switch pushed completely up or down. Fan will not operate when switch is in the middle.
2. Fan is noisy:	1. Make sure all screws in motor assembly are snug, but not overtightened. 2. Make sure the screws that attach the blade arms to the motor are tight. 3. Make sure wire connectors are not rattling against each other or against the interior wall of the switch housing. 4. Make sure wire connectors are not rattling against each other or against the interior wall of the canopy. 5. Some fan motors are sensitive to signals from Solid State variable speed controls. DO NOT USE a Solid State variable speed control. 6. Ensure fan does not wobble excessively (see Fan wobbles solutions below).
3. Fan wobbles:	1. Ensure the mounting bracket is tightened securely to outlet box and outlet box is mounted firmly to ceiling joist. 2. Ensure all blades are screwed firmly into blade arms. 3. Ensure all blade arms are tightened securely to motor. 4. Switch one blade with a blade from the opposite side. Or balance the fan using the blade balancing kit. 5. If blade wobble is still noticeable, interchanging two adjacent (side by side) blades can redistribute the weight and possibly result in smoother operation.
4. Light does not work:	1. Check for loose or disconnected 9-pin and/or single-pin connectors in switch housing or light kit. 2. Ensure the blue wire from fan is connected to hot power supply wire. 3. Check for faulty light bulbs. 4. Ensure total wattage of bulbs does not exceed 180 watts (for incandescent bulbs only).
5. Remote control does not work:	1. **To re-sync wall control to the fan** - Switch the power to the fan off and back on again. Within 30 seconds, press and hold the HIGH SPEED and LOW SPEED buttons (or the "LEARN" button, located in the battery compartment) for 5 seconds. Fan will turn on at low speed and light off. This confirms the syncing process is successful. 2. Insert new CR2032 batteries in battery compartment of the wall control. 3. If there are several fans in close proximity, turn power off to other fans and re-sync the remote (see Corrective Action 1 above).

LIMITED LIFETIME WARRANTY

To obtain service, please contact the Service Department:
1-877-706-3267, 8 a.m.-5 p.m. Central, Monday-Friday.

Model Name: 52" Ceiling Fan
Model No: 50759 - Bronze

Set forth below, the manufacturer, Hong Kong China Electric appliance Company (HKC) warrants the fan motor for this ceiling fan to be free from defects in workmanship and material for the life of the product. Also, subject to the limitations below, HKC warrants all ceiling fan parts ("ceiling fan parts" excludes the motor and parts made in whole or in part with glass) to be free from defects in workmanship and material for a period of one year after the date of purchase by the original purchaser at retail.

All claims must be made by the original purchaser, whether such purchaser purchased the product through a store or contractor. Ceiling fan part defects must be reported within the first year from the date of purchase. Parts made in whole or in part with glass and the finishes of metal and other surfaces are not warranted.

Purchasers are responsible for all costs of removing and reinstalling the product. Any damage to any part caused by ordinary wear and tear, accident, misuse, or improper installation, is not covered by this warranty. HKC assumes no responsibility whatsoever for fan installation. Any service performed by a non-licensed electrician will render the warranty invalid.

HKC's sole responsibility shall be to repair or replace the motor, parts, or product within the terms stated above. HKC shall not be liable for any loss or damage of any kind, including any incidental or consequential damages resulting directly or indirectly, from any breach of warranty, express or implied, or any other failure of this product. Some states do not allow the exclusion or limitation of incidental or consequential damages so this limitation may not apply to you.

If the original purchaser ceases to own the fan, this warranty is voided.

Should the purchaser encounter a problem with your fan related to defects in workmanship or materials within the warranty period associated with the defective part, HKC agrees to replace the defective part without charge, or at its option, to replace the ceiling fan with a comparable or superior model.

HKC's warranties are limited to the written warranties set out in this HKC ceiling fan limited lifetime warranty. All other express and implied warranties, including, without limitation, the implied warranty of fitness for a particular purpose and the implied warranty of merchantability are disclaimed. Some states do not allow the disclaimer of implied warranties, so this disclaimer may not apply to you.