28 " Ceiling Fan

Owner's Manual

Model #51655, 51656

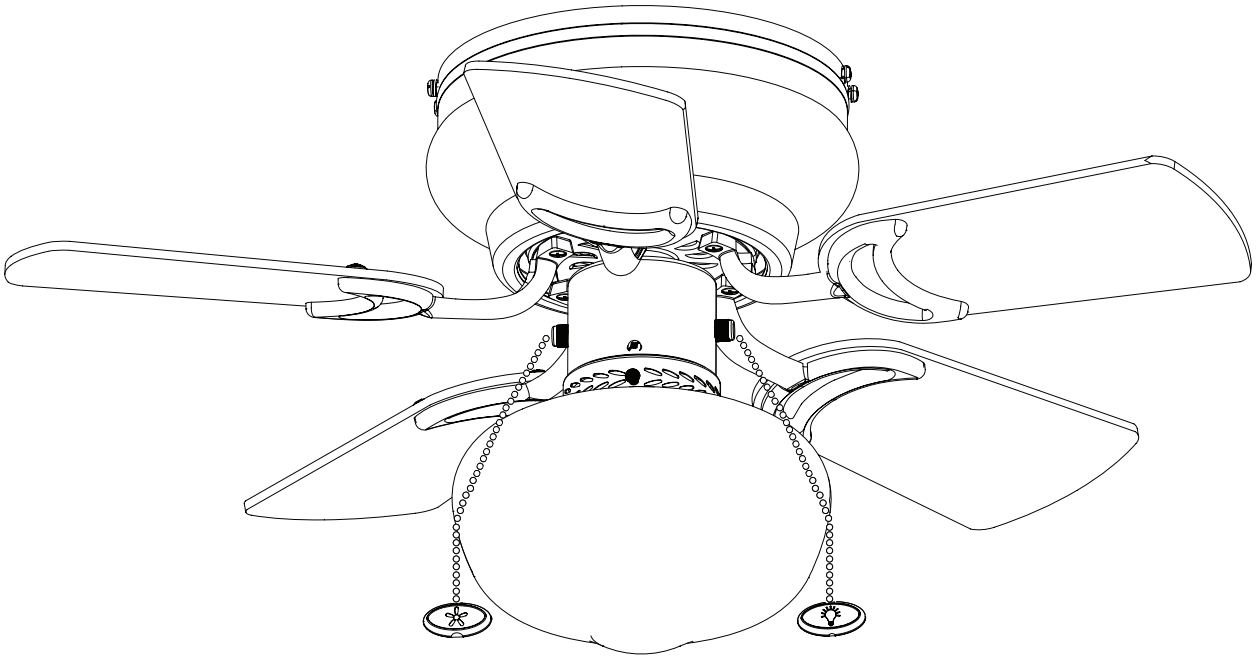

To obtain service, please contact the Service Department:
1-877-706-3267, 8 a.m. - 5 p.m. Central Time, Monday - Friday.

PACKAGE CONTENTS

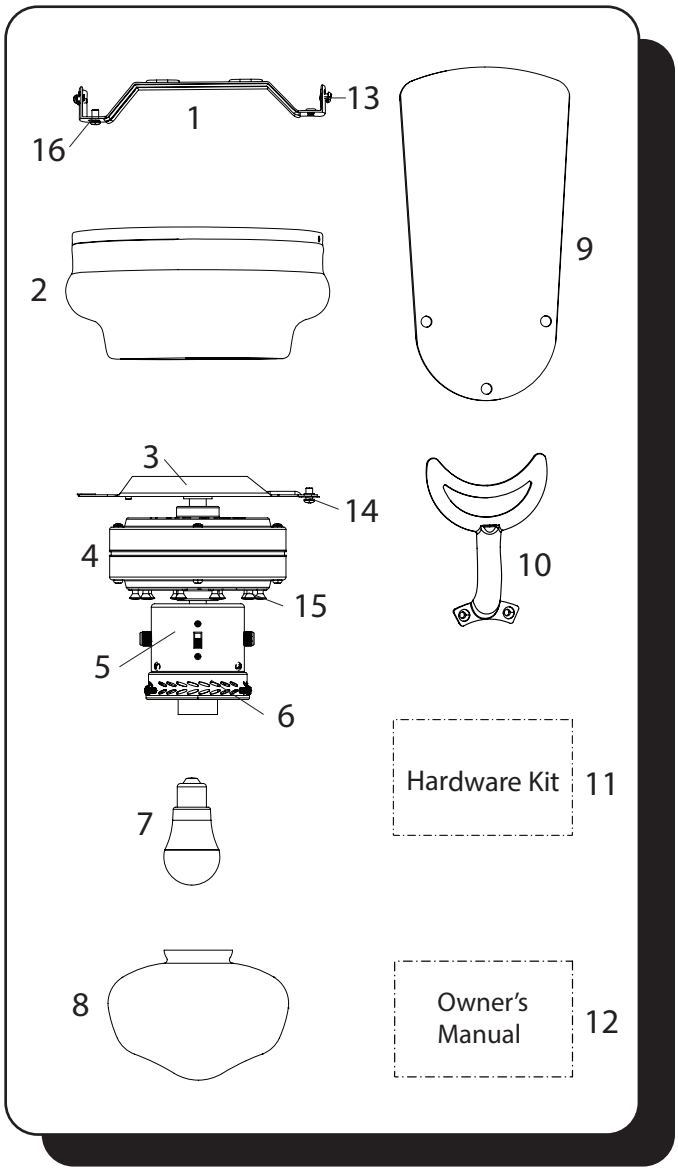

Unpack your fan and check the contents. You should have the following items:

PACKAGE CONTENTS

1. Upper Mounting Bracket
2. Motor Housing
3. Lower Mounting Bracket
4. Motor
5. Switch Housing
6. Light Kit
7. E26-base LED Bulb
8. Glass Globe
9. Blade (x5)
10. Blade Arm (x5)
11. Hardware Kit
12. Owner's Manual
13. Mounting Screw (x4)
14. Lower Bracket Screw
15. Motor Screw (x10)
16. Upper Bracket Screw (x2)

HARDWARE CONTENTS

17. Blade Screw (x15)
18. Blade Washer (x15)
19. Wire Connector (x3)
20. Pull Chain Extension (x2)
21. Blade Balancing Kit
22. Secondary Support Screw
23. Support Washer
24. Secondary Spring Washer

Note: Some extra hardware has been included. The quantity listed above is the number required for installation.

HARDWARE CONTENTS

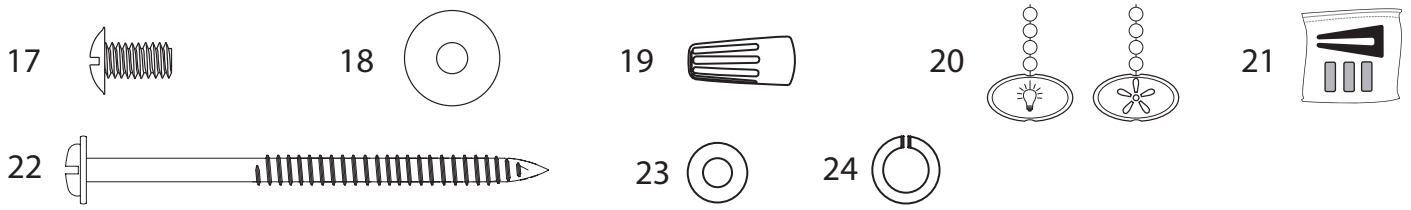

TOOLS REQUIRED (not included)

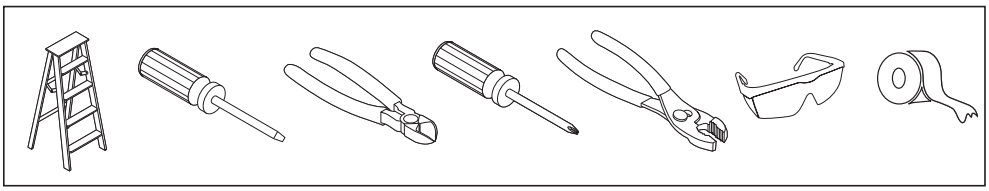

Tools required for assembly: Electrical tape, Phillips Screwdriver, Pliers, Safety Glasses, Step Ladder, Wire Cutters and Wire Strippers

Helpful Tools: AC Tester Light, Tape Measure, and Wiring Handbook

EXPLODED VIEW DETAIL

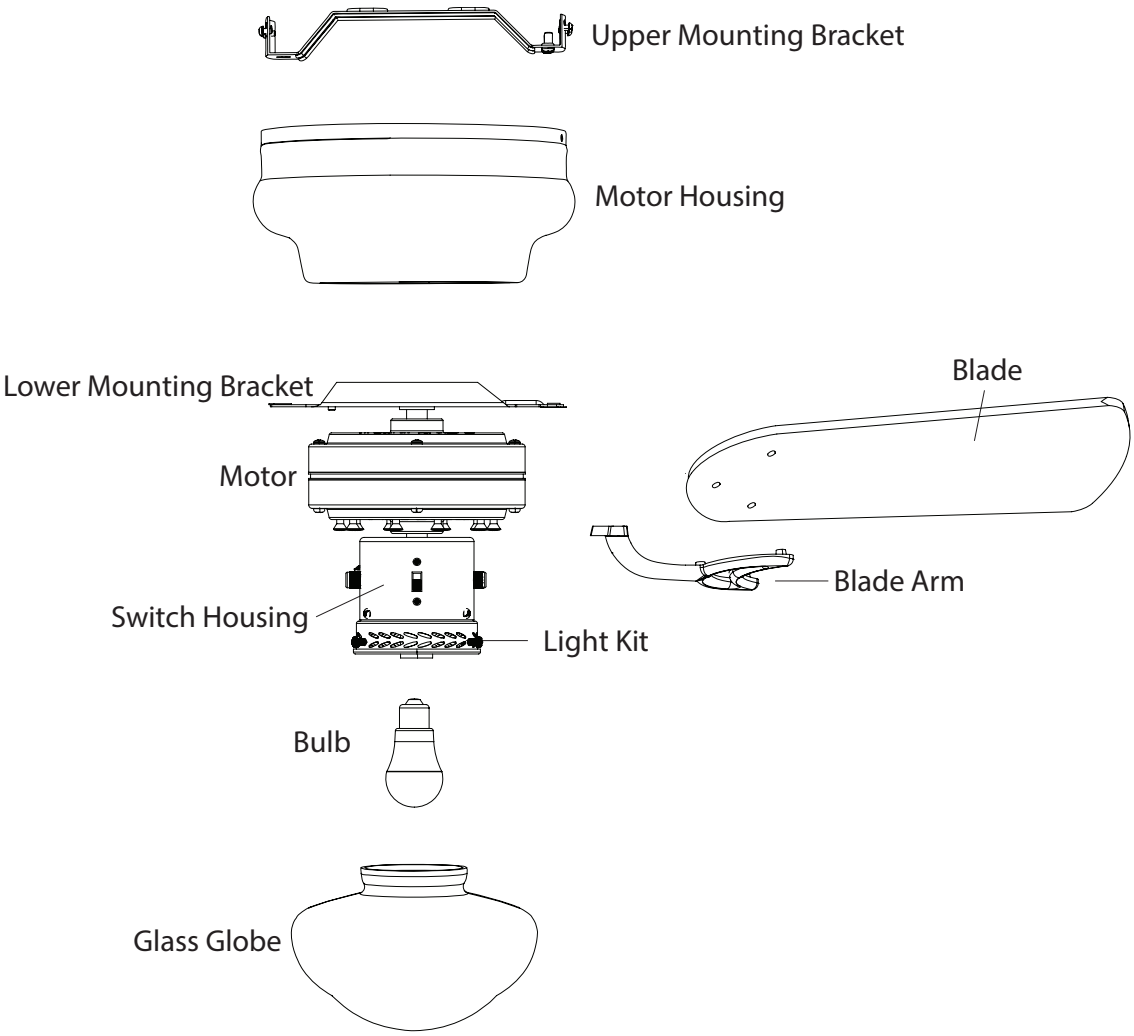

DIMENSION REFERENCE

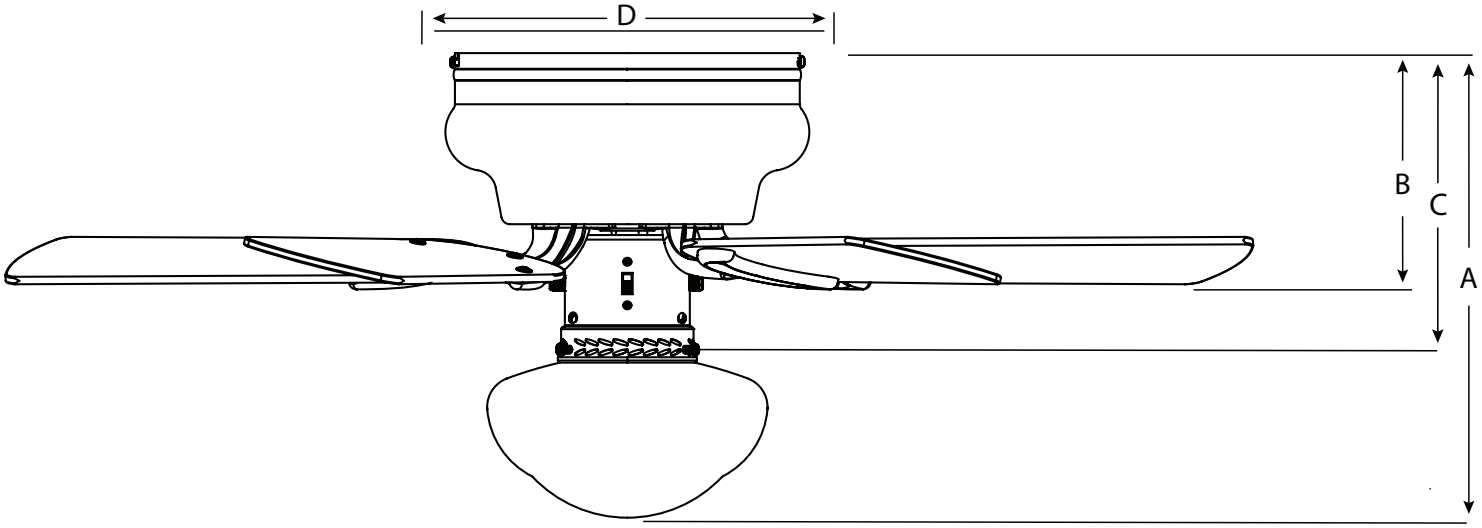

A. 13.22 in. B. 5.88 in. C. 7.01 in. D. 9.39 in.

SAFETY INSTRUCTIONS

READ ALL SAFETY INFORMATION AND INSTALLATION INSTRUCTIONS BEFORE YOU BEGIN INSTALLING THE FAN AND SAVE INSTRUCTIONS.

CAUTION:

- All set screws of the fan must be checked and retightened where necessary before installation.
- To reduce the risk of personal injury, do not bend the blade brackets when installing the brackets, balancing the blades or cleaning fan. Do not insert foreign objects in between rotating fan blades.
- Before changing the fan direction, turn off the fan and wait for the fan blades to stop completely.
- The safeguards provided by these safety instructions and by the separate installation instructions are not meant to cover all possible conditions and situations that may occur. It must be understood that common sense, caution and care are factors which can not be built into this product. These factors must be supplied by the person(s) installing, caring for and operating the fan.
- The fan weight is Net Weight: 9.5 lb (4,3 kg). Be sure the outlet box (not included) is securely attached to the building structure and is marked "Acceptable For Fan Support". Failure to do so can result in serious injury.
- This device complies with Industry Canada license-exempt RSS standard(s). Operation is subject to the following two conditions: (1) this device may not cause interference, and (2) this device must accept any interference, including interference that may cause undesired operation of the device (if applicable).
- CAN ICES-005 (B) / NMB-005 (B)
- This device complies with part 15 of the FCC Rules. Operation is subject to the following two conditions: (1) This device may not cause harmful interference, and (2) this device must accept any interference received, including interference that may cause undesired operation.
  This equipment has been tested and found to comply with the limits for a Class B digital device, pursuant to Part 15 of the FCC Rules. These limits are designed to provide reasonable protection against harmful interference in a residential installation. This equipment generates, uses and can radiate radio frequency energy and, if not installed and used in accordance with the instructions, may cause harmful interference to radio communications. However, there is no guarantee that interference will not occur in a particular installation. If this equipment does cause harmful interference to radio or television reception, which can be determined by turning the equipment off and on, the user is encouraged to try to correct the interference by one or more of the following measures:

  --Reorient or relocate the receiving antenna.

  --Increase the separation between the equipment and receiver

  --Connect the equipment into an outlet on a circuit different from that to which the receiver is connected.

  --Consult the dealer or an experienced radio/TV technician for help.

  Please note changes or modifications not expressly approved by the party responsible for compliance could void the user's authority to operate the equipment.

HKC-US
3350 Player's Club Parkway, #225
Memphis, TN 38125
1-877-706-3267

SAFETY INSTRUCTIONS

WARNING:

- To avoid risk of electric shock, be sure to shut off power at the main fuse or circuit breaker box before installing or servicing this fixture. Turning off the electrical power by using the light switch is not sufficient to prevent electrical shock.
- To reduce the risk of injury, install the fan so that the blades are at least 7 feet (2.1 Meters) above the floor and at least 18 inches (0.5 Meters) from the tip of the blades to the wall.
- To reduce the risk of fire, electric shock, or personal injury, mount to outlet box marked "acceptable for fan support" and use mounting screws provided with the outlet box.
- The installation has to be in accordance with the national electrical code, ANSI/NFPA 70-1999 and local codes. If you are unfamiliar with the methods of installing electrical wiring, seek the services of a qualified licensed electrician.
- Using a full-range dimmer switch to control fan speed will cause a loud humming noise from the fan. To reduce the risk of fire or electric shock, do NOT use a full-range dimmer switch to control the fan speed.

ASSEMBLY INSTRUCTIONS

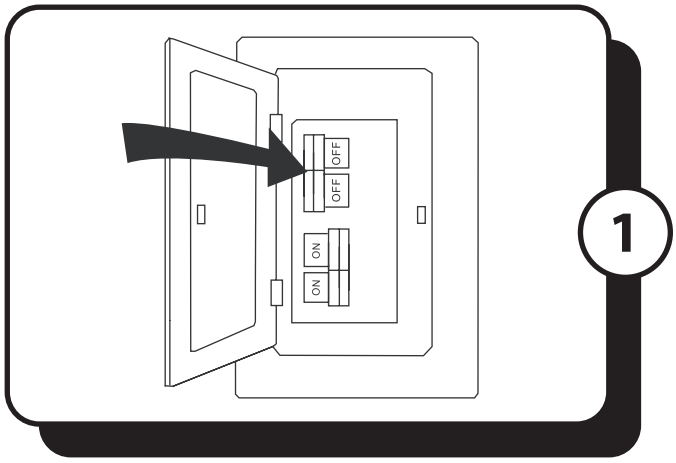

1. Turn **OFF** the electrical power at the main fuse or circuit breaker.
DANGER: Failure to disconnect the power supply prior to installation may result in serious injury or death.

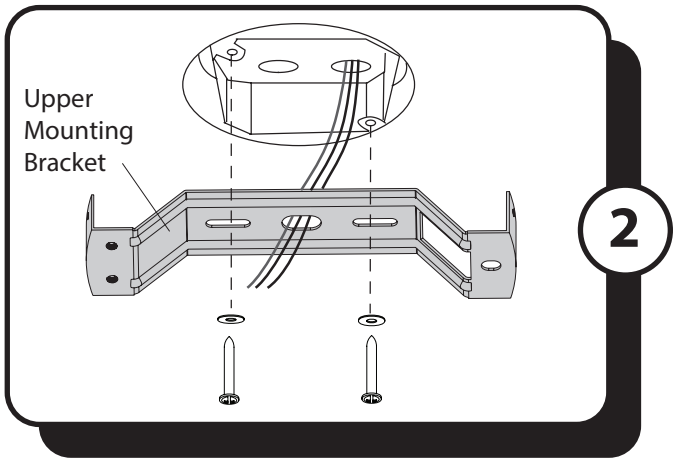

2. Secure the upper mounting bracket to the outlet box (not included) using the two mounting screws and washers supplied with outlet box.

WARNING: It is very important that you use the proper hardware when installing the upper mounting bracket as it will support the fan.

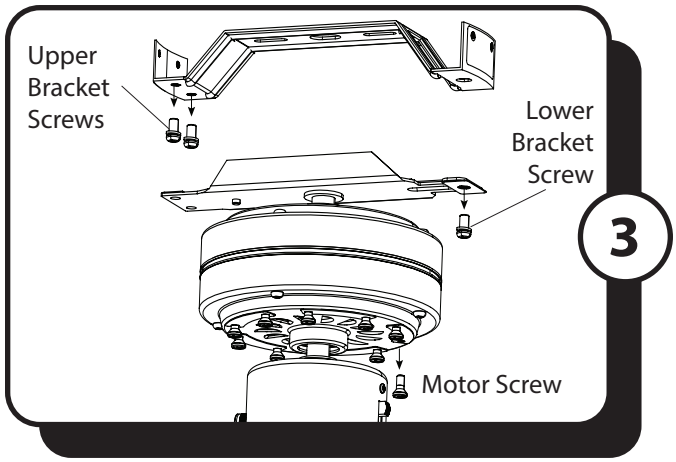

Note: Remove the wire restraint from the wires on top of the lower bracket.

3. Remove the preassembled lower bracket screw from the lower mounting bracket and the upper bracket screws from the upper mounting bracket. Remove the motor screws and set aside for later.

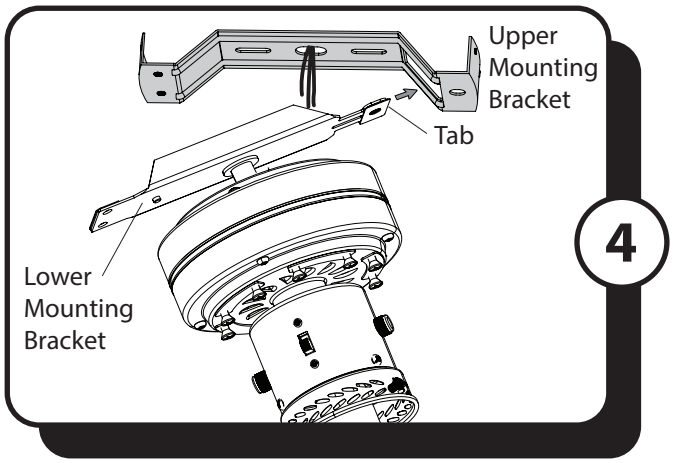

4. Place the tab of the lower mounting bracket into the large slot in the upper mounting bracket.

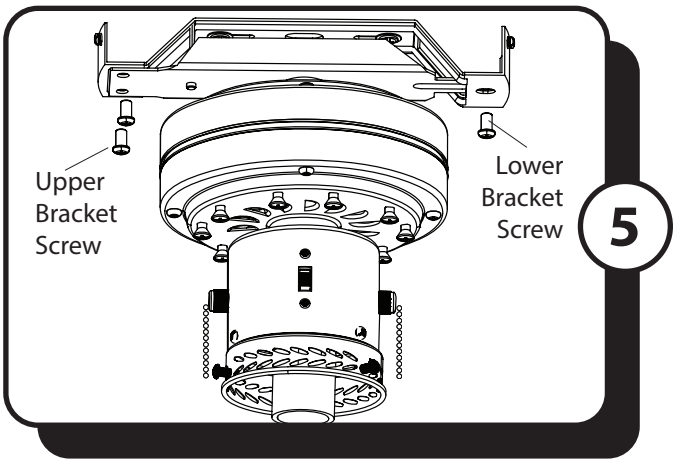

5. Reinstall the previously removed lower bracket screw and upper mounting screws to secure the lower mounting bracket to the upper mounting bracket.

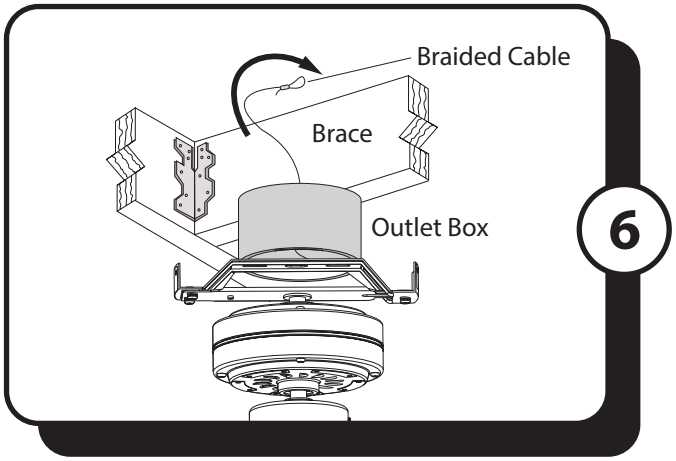

SECONDARY HANGING SYSTEM

For installation in the United States: Building codes in the U.S.A. do not require installation of a Secondary Hanging System. If desired, the braided cable can be cut and removed using wire cutters (sold separately). *Skip to Step 9.*

For installation in Canada: In compliance with building codes in Canada, installation of the Secondary Hanging System is required.

6. Feed the loop of the braided cable, preassembled to the motor assembly, up through the outlet box mounted in the ceiling.

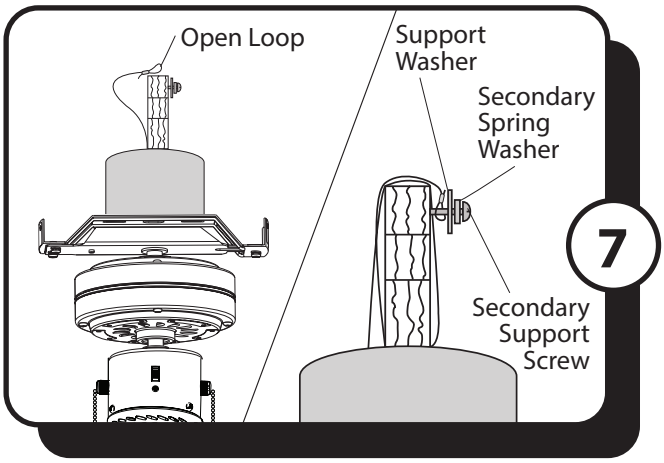

7. Install secondary support screw, secondary spring washer, and support washer partly into the side of the brace installed in the ceiling. Then lift the braided cable up and over the ceiling brace and place the open loop of the braided cable around the secondary support screw.
Note: The ceiling support brace may not be accessible from below. If not, it must be accessed from above.
Important: The braided cable must make a complete circle around the support brace to secure the fan.

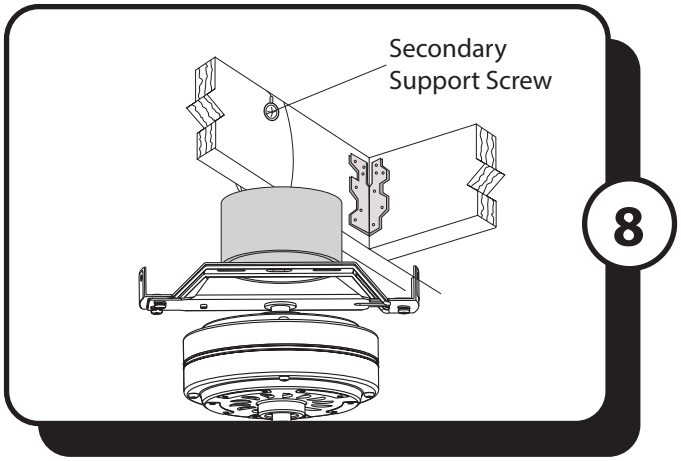

8. Tighten the secondary support screw securing the braided cable.

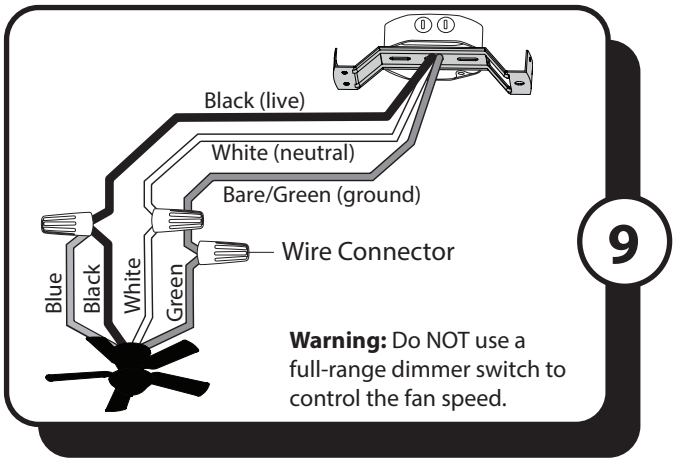

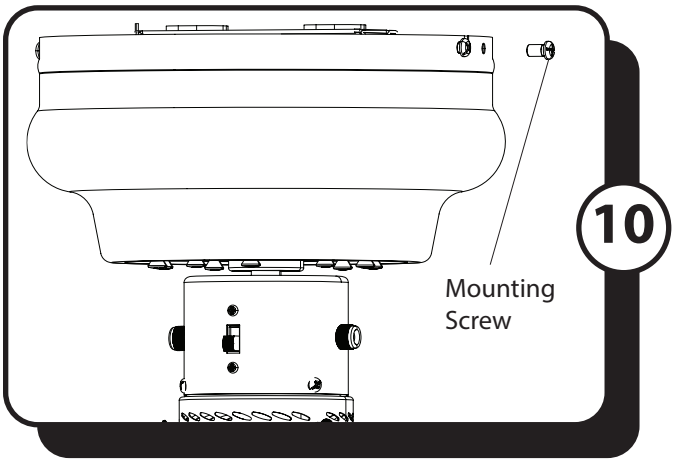

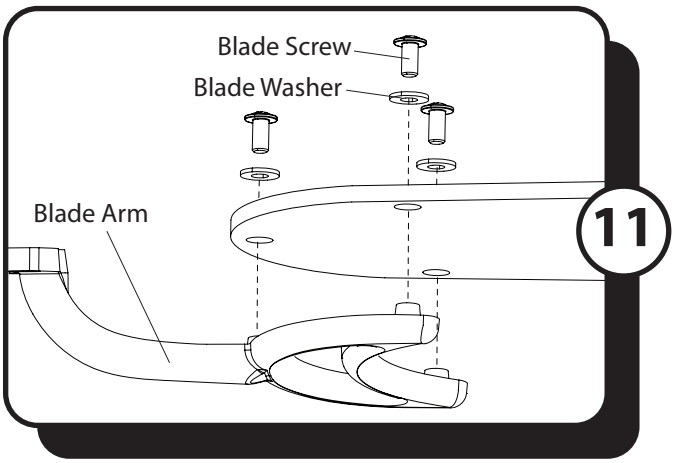

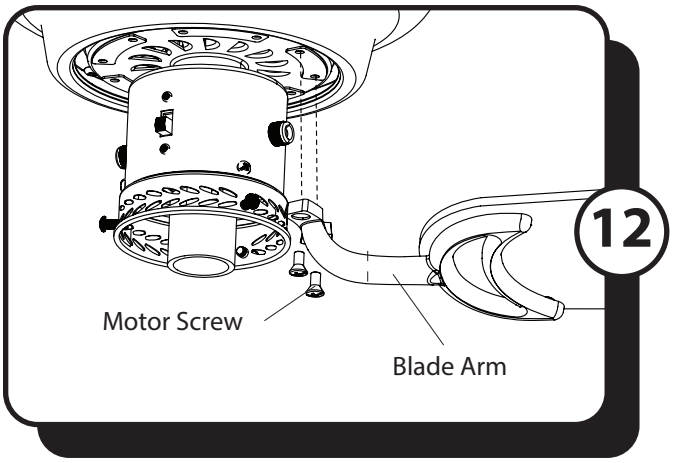

9. Use wire connectors to connect the fan wires to the power supply wires according to the wiring diagram and the following instructions:
• Connect the green wire from the lower mounting bracket to the bare/green (ground) supply wire.
• Connect the white wire from the fan to the white (neutral) supply wire.
• Connect the black and blue wires from the fan to the black (live) supply wire.
Note: If there is a second live/hot wire coming from the outlet box, connect it to the blue (light power) wire for separate light and fan control,
Important: After the connections have been made, the wires should be turned upward and pushed carefully up into the outlet box. Place the black and white wire connections on opposite sides of the outlet box.

10. Temporarily lift the motor housing up to the upper mounting bracket to determine which two mounting screws in the sides of the upper mounting bracket align with the J-slots in the top edge of the motor housing. Partially loosen the two mounting screws that align with the J-slots. Remove the other two mounting screws from opposite sides of the mounting bracket. Slide the motor housing over the motor, aligning the slotted holes in the motor housing with the loosened motor housing screws in the upper mounting bracket. Twist the motor housing to lock. Then re-insert the two previously removed mounting screws and securely tighten all screws.

11. Partially insert the blade screws along with the blade washers through the blade and into the blade arm. Tighten each blade screw with a Phillips screwdriver (not included), starting with the one in the middle. Repeat this step for the remaining blades and blade arms.

12. Install the blade arm to the underside of the motor assembly with previously removed motor screws. Tighten each blade arm completely before moving to the next.

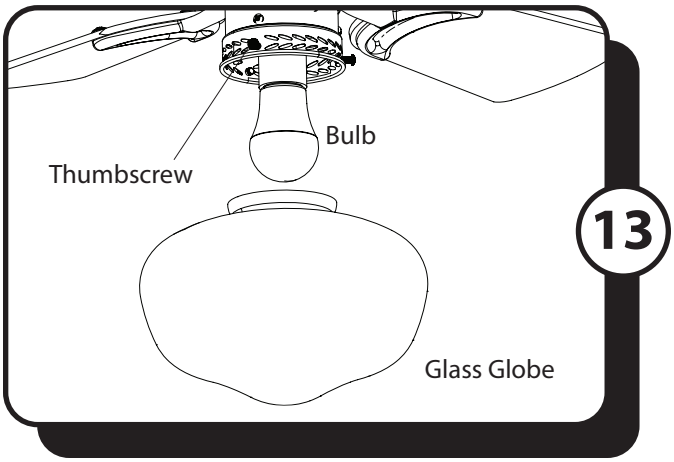

13. Install the E26-base LED bulb into the socket of the light kit. Then, loosen the three thumbscrews near the bottom of the light kit. Lift the glass bowl into the light kit and retighten the previously loosened thumbscrews to secure.
Important: Make sure you allow the bulbs and light kit to cool before you replace the bulbs.

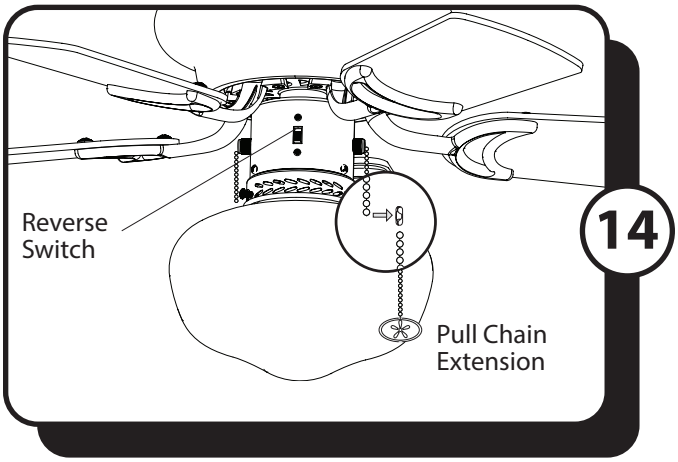

14. Attach pull chain extensions to the appropriate pull chains. **Note:** When facing the reverse switch, the light pull chain is on the left and the fan pull chain is on the right.

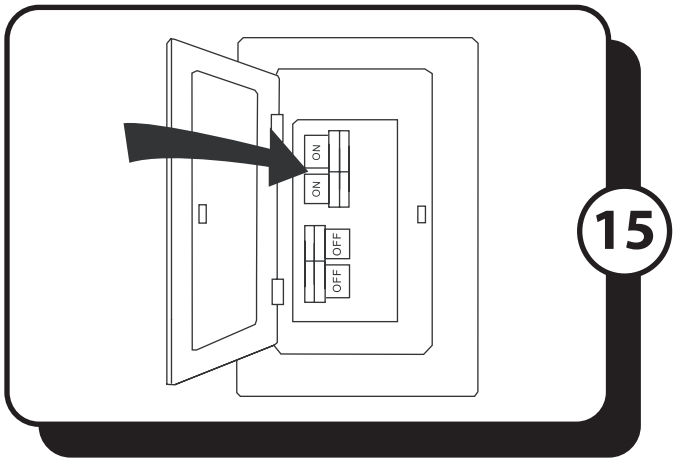

15. Restore the power at the main fuse or circuit breaker and the wall switch.

Assembly is complete.

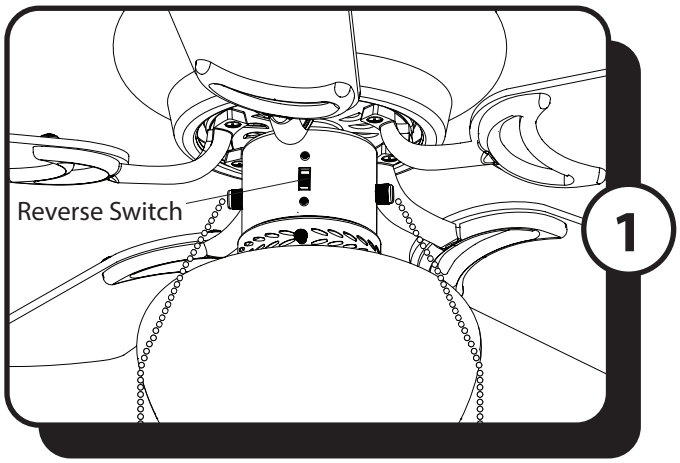

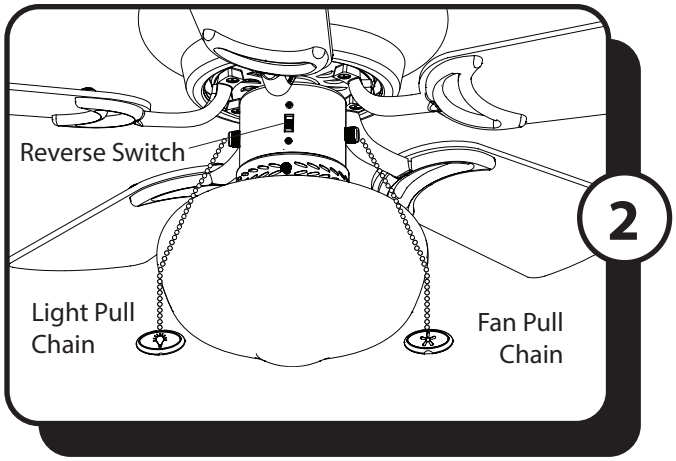

1. Using a ceiling fan will allow you to raise your thermostat setting in summer and lower your thermostat setting in winter without feeling a difference in your comfort.

In warmer weather, push the reverse switch down which will result in downward airflow creating a wind chill effect.

In cooler weather, push the reverse switch up, which will result in upward airflow that can help move stagnant, hot air off the ceiling area.

Importante: Wait for the fan to stop before moving the reverse switch. The reverse switch must be set either completely up or down in order for the fan to function correctly. If the reverse switch is set in the middle position, the fan will not operate.

2. The fan pull chain has four positions to control the fan speed. One pull is HIGH, two is MEDIUM, three is LOW, and four turns the fan OFF. The light pull chain turns the light ON and OFF.

Note: When facing the reverse switch, the fan pull chain is on the right and the light pull chain is on the left.

TROUBLESHOOTING

If you have difficulty operating your new ceiling fan, it may be the result of incorrect assembly, installation or wiring. In some cases, these installation errors may be mistaken for defects. If you experience any faults, please check the Troubleshooting section below. If a problem cannot be remedied or you are experiencing difficulty in installation, please contact the Service Department: 1-877-706-3267, 8 a.m. - 5 p.m. Central, Monday - Friday.

PROBLEM	SUGGESTED REMEDY

WARNING: To reduce the risk of fire, electrical shock or personal injury, shut off the power supply to fan before you begin any maintenance tasks.

1. Fan does not start:	1. Make sure that the wall switch is turned ON. 2. Check main and branch circuit fuses or circuit breakers. 3. Check all wire connections from household supply wires to the fan. 4. Make sure forward/reverse switch pushed completely up or down. Fan will not operate when switch is in the middle.
2. Fan is noisy:	1. Make sure all screws in motor housing are snug, but not overtightened. 2. Make sure the screws that attach the blade arms to the motor are tight. 3. Some fan motors are sensitive to signals from Solid State variable speed controls. DO NOT USE a Solid State variable speed control. 4. Ensure fan does not wobble excessively (see Fan wobbles solutions below).
3. Fan wobbles:	1. Ensure the mounting bracket is tightened securely to outlet box and outlet box is mounted firmly to ceiling joist. 2. Ensure all blades are screwed firmly into blade arms. 3. Ensure all blade arms are tightened securely to motor. 4. Switch one blade with a blade from the opposite side. Or balance the fan using the blade balancing kit. 5. If blade wobble is still noticeable, interchanging two adjacent (side by side) blades can redistribute the weight and possibly result in smoother operation.
4. Light does not work:	1. Ensure the blue wire from fan is connected to hot power supply wire. 2. Check for faulty light bulbs. 3. Ensure total wattage of bulbs does not exceed 180 watts (for incandescent bulbs only).

LIMITED LIFETIME WARRANTY

To obtain Service, please contact Customer Service:
1-877-706-3267, 8 a.m. - 5 p.m. Central Time, Monday - Friday.

Model Name: 28" Ceiling Fan
Model No: 51655 - Bronze
51656 - Brushed Nickel

Set forth below, the manufacturer, Hong Kong China Electric appliance Company (HKC) warrants the fan motor for this ceiling fan to be free from defects in workmanship and material for the life of the product. Also, subject to the limitations below, HKC warrants all ceiling fan parts ("ceiling fan parts" excludes the motor and parts made in whole or in part with glass) to be free from defects in workmanship and material for a period of one year after the date of purchase by the original purchaser at retail.

All claims must be made by the original purchaser, whether such purchaser purchased the product through a store or contractor. Ceiling fan part defects must be reported within the first year from the date of purchase. Parts made in whole or in part with glass and the finishes of metal and other surfaces are not warranted.

Purchasers are responsible for all costs of removing and reinstalling the product. Any damage to any part caused by ordinary wear and tear, accident, misuse, or improper installation, is not covered by this warranty. HKC assumes no responsibility whatsoever for fan installation. Any service performed by a non-licensed electrician will render the warranty invalid.

HKC's sole responsibility shall be to repair or replace the motor, parts, or product within the terms stated above. HKC shall not be liable for any loss or damage of any kind, including any incidental or consequential damages resulting directly or indirectly, from any breach of warranty, express or implied, or any other failure of this product. Some states do not allow the exclusion or limitation of incidental or consequential damages so this limitation may not apply to you.

If the original purchaser ceases to own the fan, this warranty is voided.

Should the purchaser encounter a problem with your fan related to defects in workmanship or materials within the warranty period associated with the defective part, HKC agrees to replace the defective part without charge, or at its option, to replace the ceiling fan with a comparable or superior model.

HKC's warranties are limited to the written warranties set out in this HKC ceiling fan limited lifetime warranty. All other express and implied warranties, including, without limitation, the implied warranty of fitness for a particular purpose and the implied warranty of merchantability are disclaimed. Some states do not allow the disclaimer of implied warranties, so this disclaimer may not apply to you.