42 " HUGGER CEILING FAN

Owner's Manual

Models # 50860, 80029, 80092

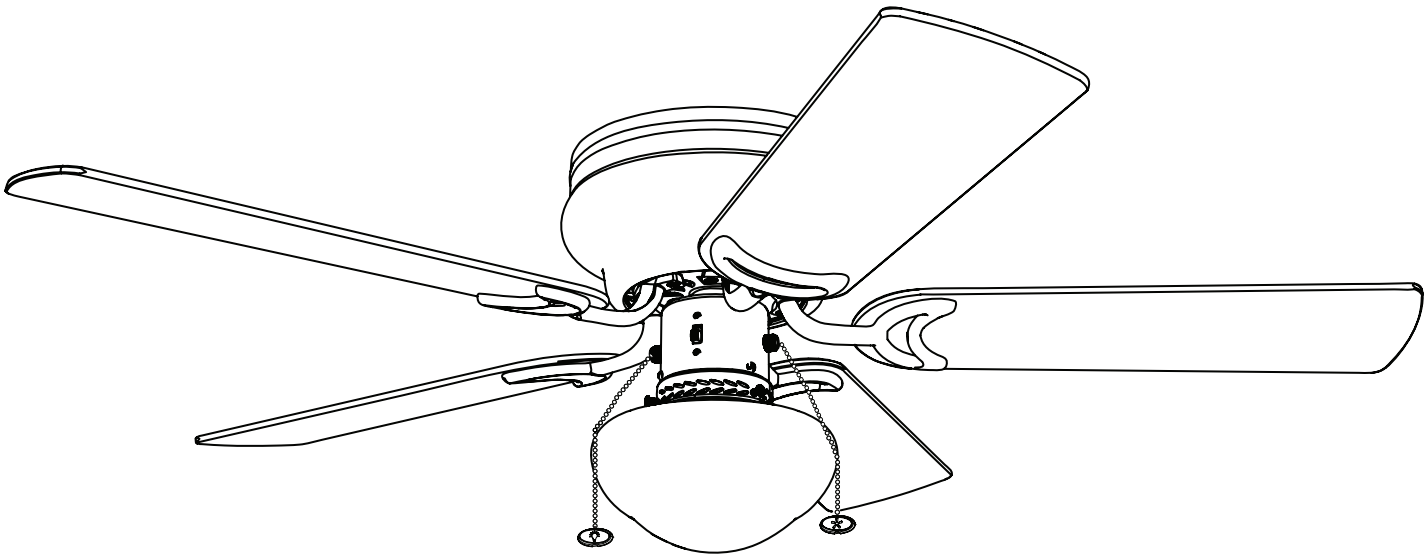

If a problem cannot be remedied or you are experiencing difficulty in installation, please contact Customer Service: 1-877-706-3267.

PACKAGE CONTENTS

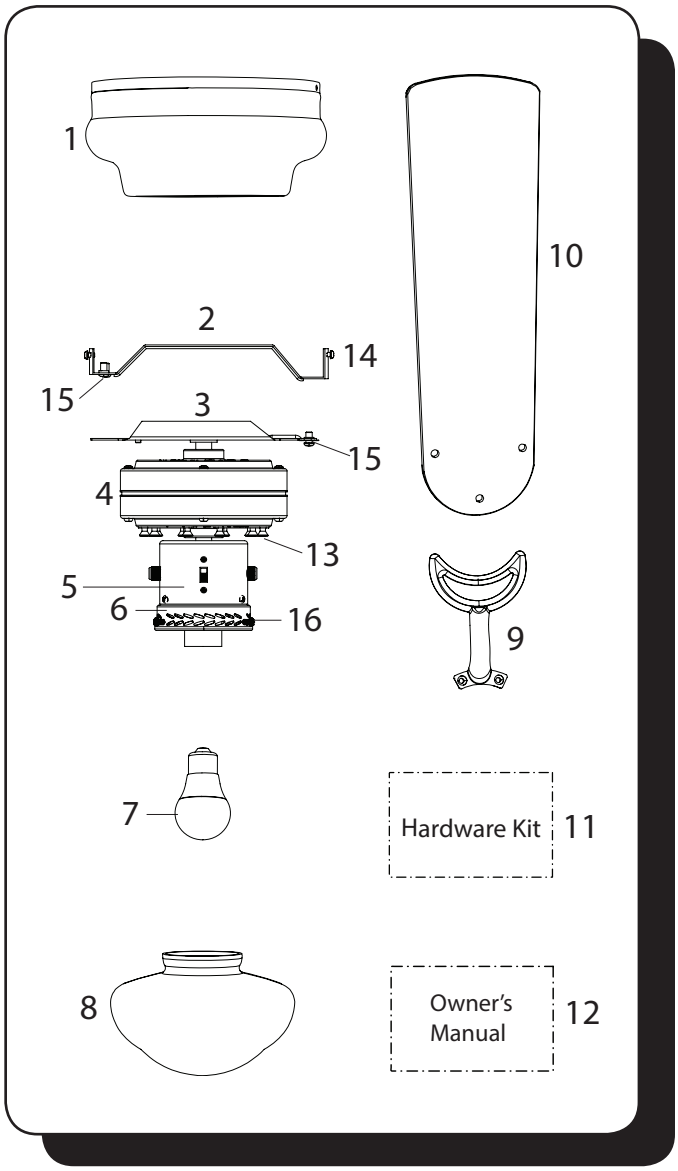

Unpack your fan and check the contents. You should have the following items:

PACKAGE CONTENTS

1. Motor Housing
2. Mounting Bracket
3. Lower Bracket
4. Motor
5. Switch Housing
6. Light Kit
7. Bulb
8. Glass Globe
9. Blade Arm (x 5)
10. Blade (x 5)
11. Hardware Kit
12. Owner's Manual
13. Motor Screw (x 10)
14. Mounting Screw (x 4)
15. Bracket Screw (x 3)
16. Thumbscrew (x 3)

HARDWARE CONTENTS

17. Blade Screw (x 15)
18. Blade Washer (x 15)
19. Wire Connector (x 3)
20. Pull Chain Extension (x 2)

Note: Some extra hardware has been included. The quantity listed above is the number required for installation.

HARDWARE CONTENTS

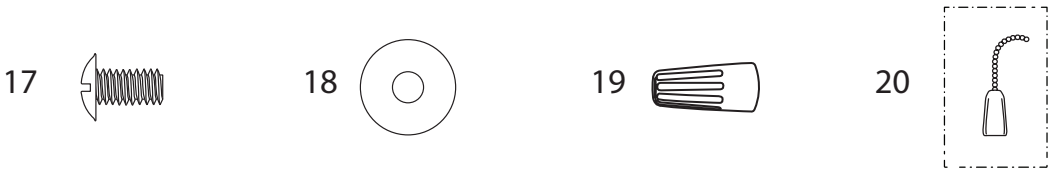

EXPLODED VIEW DETAIL

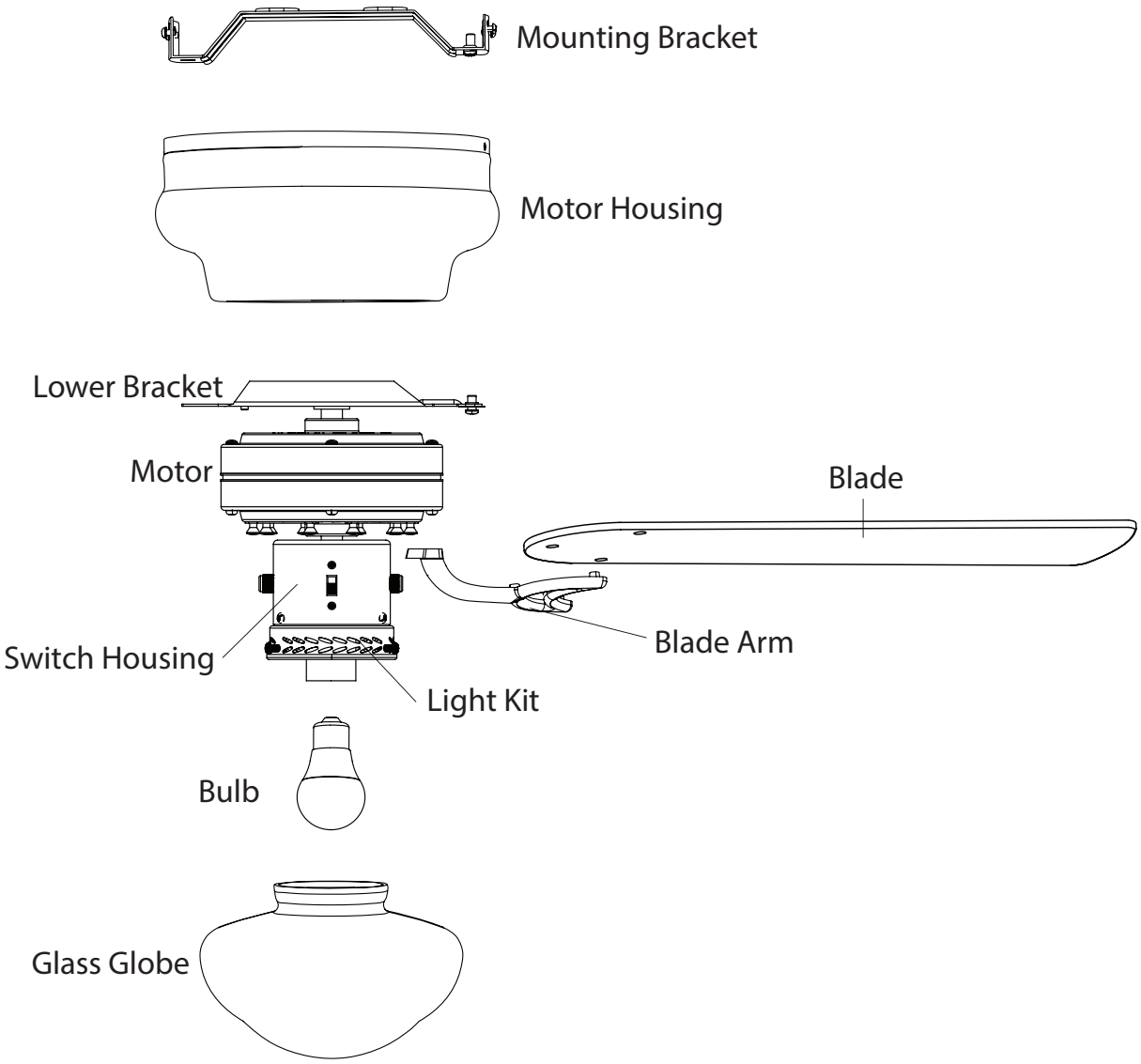

DIMENSION REFERENCE

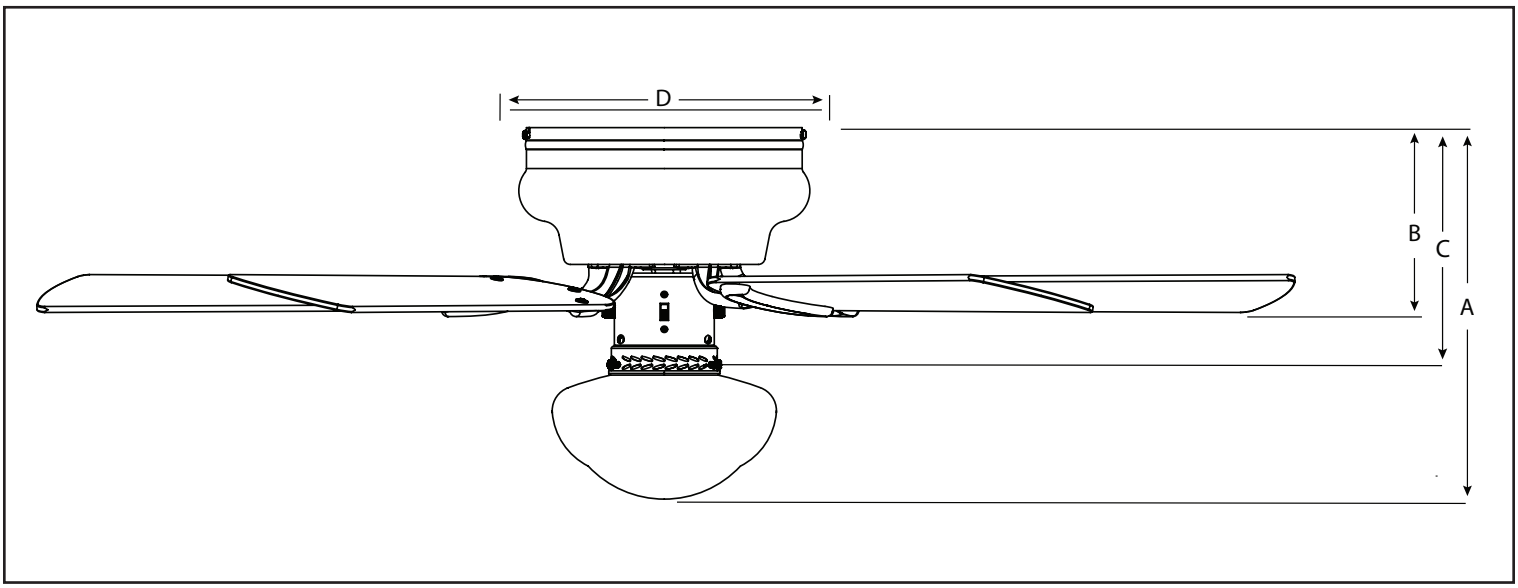

A. 10.54 in. B. 7 in. C. 8.5 in. D. 14.36 in.

SAFETY INSTRUCTIONS

READ ALL SAFETY INFORMATION AND INSTALLATION INSTRUCTIONS BEFORE YOU BEGIN INSTALLING THE FAN AND SAVE INSTRUCTIONS.

CAUTION:

- All set screws of the fan must be checked and retightened where necessary before installation.
- To reduce the risk of personal injury, do not bend the blade brackets when installing the brackets, balancing the blades or cleaning fan. Do not insert foreign objects in between rotating fan blades.
- Before changing the fan direction, turn off the fan and wait for the fan blades to stop completely.
- If a stationary appliance is not provided with a supply cord and a plug, or with other means for disconnection from the main supply having a contact separation of at least 3 mm in all poles, that means for disconnection must be incorporated in the fixed wiring in accordance with the wiring rules.
- The safeguards provided by these safety instructions and by the separate installation instructions are not meant to cover all possible conditions and situations that may occur. It must be understood that common sense, caution and care are factors which can not be built into this product. These factors must be supplied by the person(s) installing, caring for and operating the fan.
- The fan weight is Net Weight: 10.45 lb (4,75 kg). Be sure the outlet box (not included) is securely attached to the building structure and is marked "Acceptable For Fan Support". Failure to do so can result in serious injury.
- This equipment has been tested and found to comply with the limits for a Class B digital device, pursuant to Part 15 of the FCC Rules. These limits are designed to provide reasonable protection against harmful interference in a residential installation. This equipment generates, uses and can radiate radio frequency energy and, if not installed and used in accordance with the instructions, may cause harmful interference to radio communications. However, there is no guarantee that interference will not occur in a particular installation. If this equipment does cause harmful interference to radio or television reception, which can be determined by turning the equipment off and on, the user is encouraged to try to correct the interference by one or more of the following measures:

  --Reorient or relocate the receiving antenna.

  --Increase the separation between the equipment and receiver

  --Connect the equipment into and outlet on a circuit different from that to which the receiver is connected.

  --Consult the dealer or an experienced radio/TV technician for help.

  Please note changes or modifications not expressly approved by the party responsible for compliance could void the user's authority to operate the equipment.

WARNING:

- To avoid risk of electric shock, be sure to shut off power at the main fuse or circuit breaker box before installing or servicing this fixture. Turning off the electrical power by using the light switch is not sufficient to prevent electrical shock.
- To reduce the risk of injury, install the fan so that the blades are at least 7 feet (2.1 Meters) above the floor and at least 18 inches (0.5 Meters) from the tip of the blades to the wall.
- To reduce the risk of fire, electric shock, or personal injury, mount to outlet box marked "acceptable for fan support" and use mounting screws provided with the outlet box.
- The installation has to be in accordance with the national electrical code, ansi/nfpa 70-1999 and local codes. If you are unfamiliar with the methods of installing electrical wiring, seek the services of a qualified licensed electrician.
- To reduce the risk of fire or electric shock, do not use the fan with any solid-state speed control device.

ASSEMBLY INSTRUCTIONS

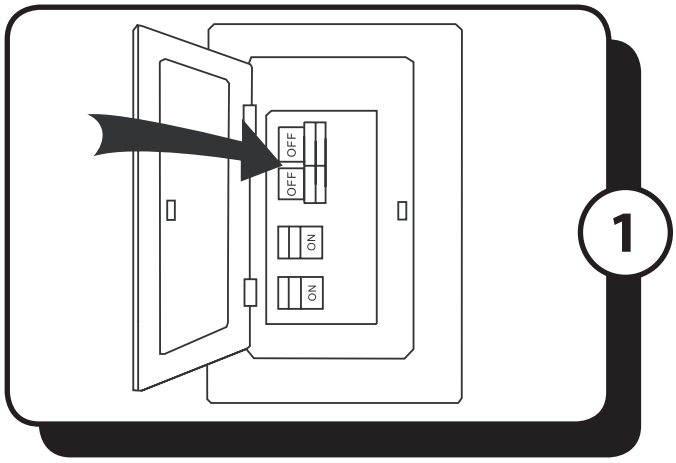

1. Turn **OFF** the electrical power at the main fuse or circuit breaker.

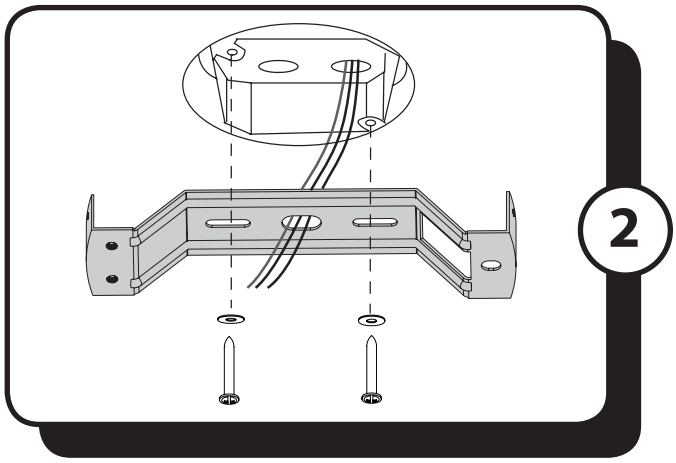

2. Secure the mounting bracket to the outlet box (not included) using the two mounting screws supplied with outlet box.

Warning: To reduce the risk of fire, electrical shock, or personal injury, mount the fan to the outlet box marked "acceptable for fan support".

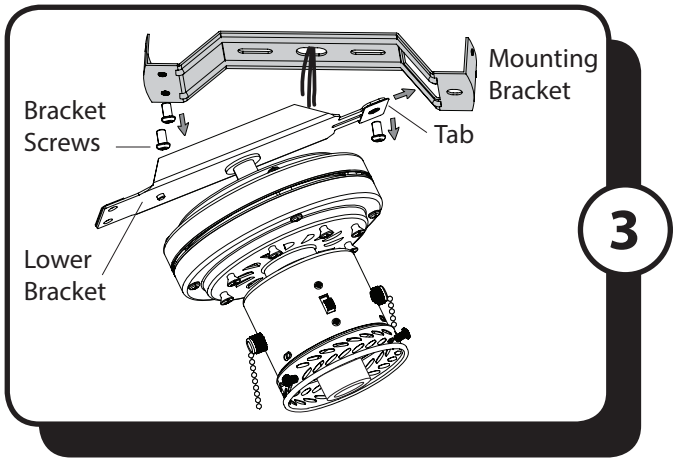

Note: Remove the wire restraint from the wires on top of the lower bracket.

3. Remove the pre-assembled bracket screws from the mounting bracket and the lower bracket. Insert the tab from one side of the lower bracket into the slot of the mounting bracket. Then align the mounting bracket so the three mounting screw holes are aligned.

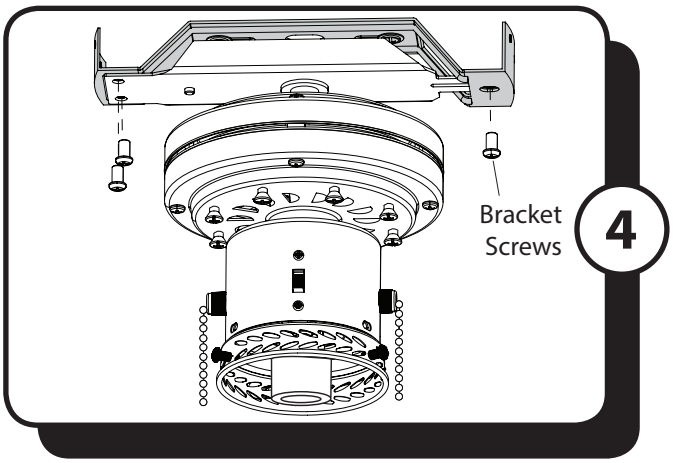

4. Secure the lower bracket to the mounting bracket with the three previously removed bracket screws.

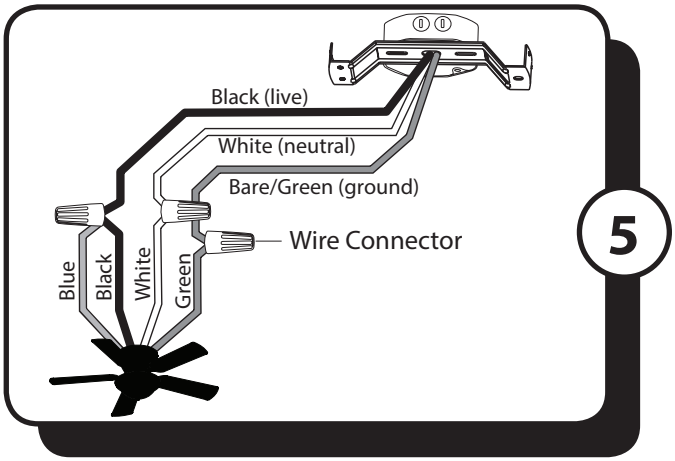

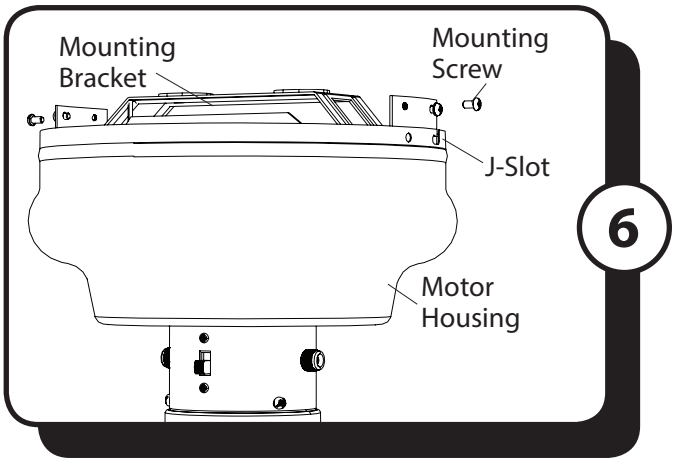

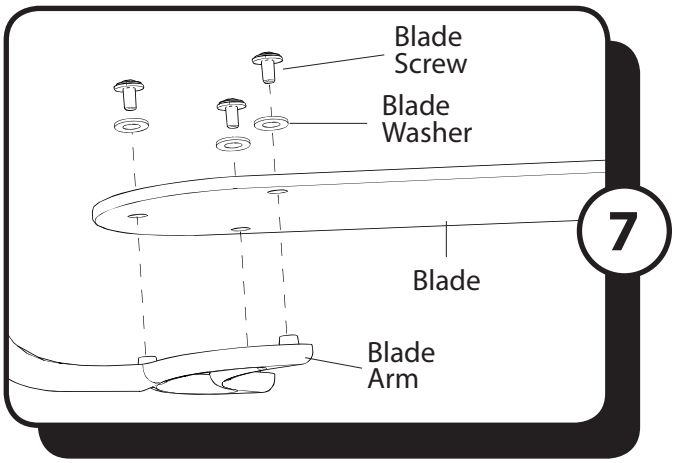

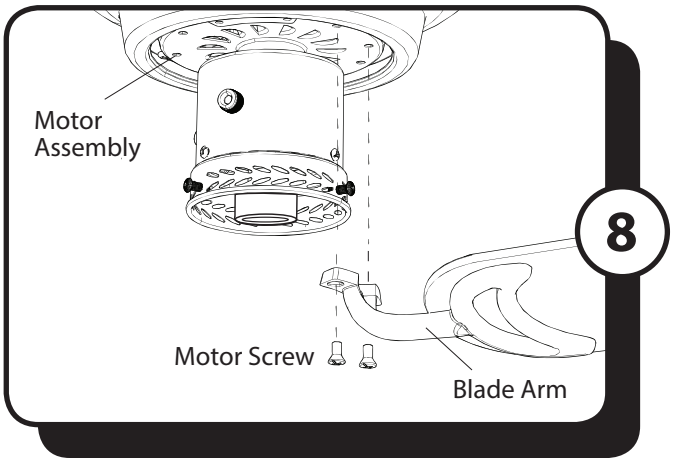

5. Use wire connectors to connect the fan wires to the power supply wires according to the wiring diagram and the following instructions:

• Connect the green wire from the lower bracket to the bare/green (ground) supply wire.

• Connect the white wire from the fan to the white (neutral/common) supply wire.

• Connect the black and blue wires from the fan to the black (live/hot) supply wire.

Note: If there is a second live/hot wire coming from the outlet box, connect it to the blue (light power) wire for separate light and fan control,

Important: After the connections have been made, the wires should be turned upward and pushed carefully up into the outlet box. Place the black and white wire connections on opposite sides of the outlet box.

6. Temporarily lift the motor housing up to the mounting bracket to determine which two mounting screws in the sides of the mounting bracket align with the J-slots in the top edge of the motor housing. Partially loosen the two mounting screws that align with the J-slots. Remove the other two mounting screws from opposite sides of the mounting bracket. Lift the motor housing over the motor aligning the J-slots in the motor housing with the loosened mounting screws in the mounting bracket. Twist the motor housing clockwise to lock. Then re-insert the two previously removed mounting screws and tighten all four mounting screws.

7. Partially insert the blade screws along with the blade washers through the blade and into the blade arm. Tighten each blade screw with a Phillips screwdriver starting with the one in the middle. Repeat this step for the remaining blades and blade arms.

8. Remove the ten motor screws from the underside of the motor assembly. Secure each blade arm to the underside of the motor assembly using two previously removed motor screws. Completely secure each blade arm before moving to the next.

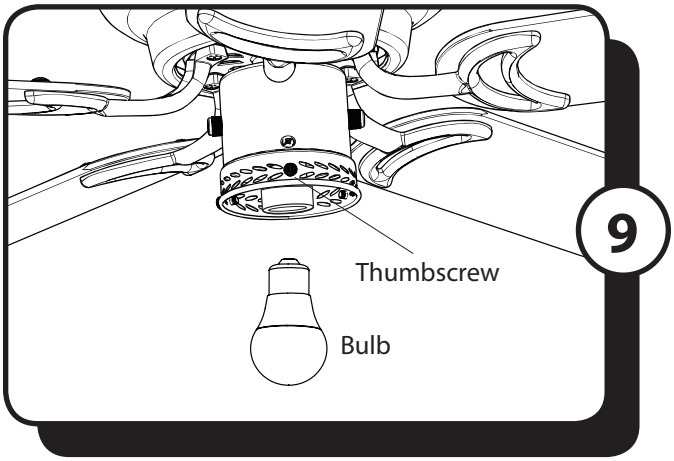

9. Install the E26-base LED bulb. Then, loosen the three thumbscrews on the lower edge of the light kit.

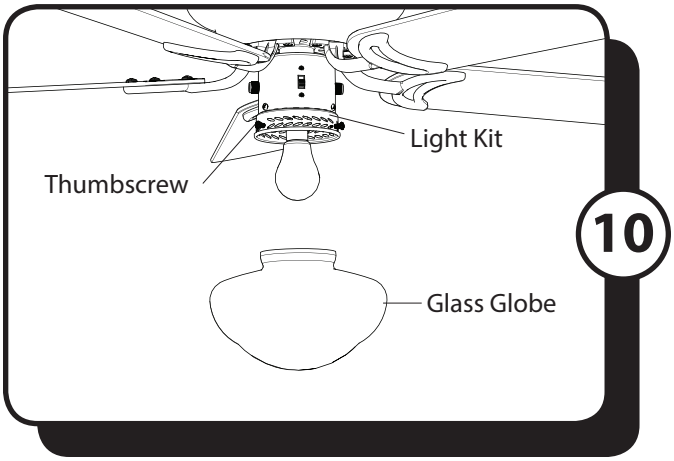

10. Lift the glass globe to light kit, secure by tightening the loosened thumbscrews.

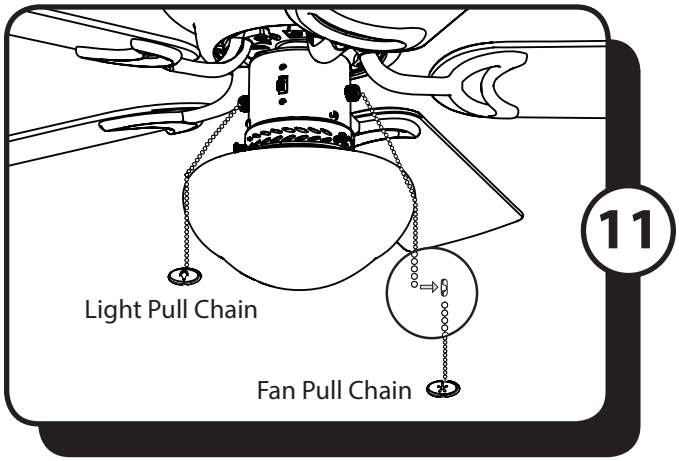

11. Attach the pull chain extensions to the fan and light pull chains. When facing the reverse switch, the light pull chain is on the left and the fan pull chain is on the right.

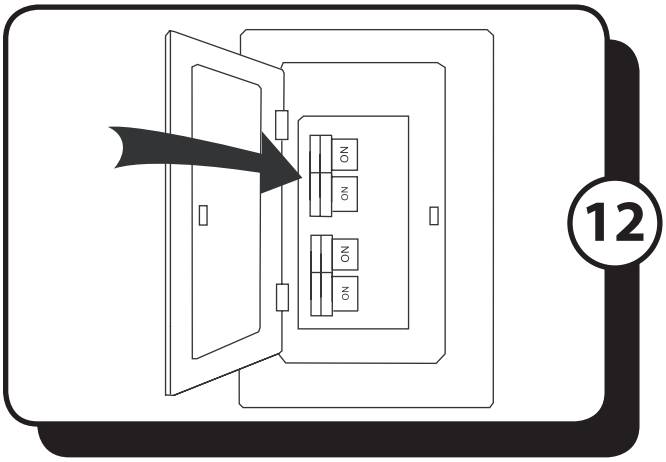

12. Restore the power at the main fuse or circuit breaker.

OPERATING INSTRUCTIONS

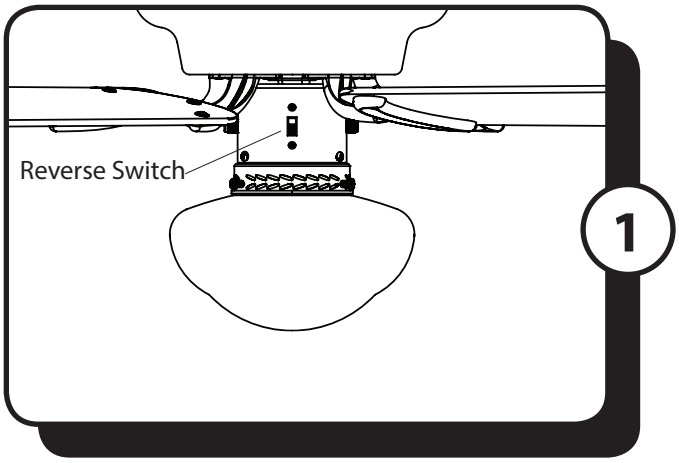

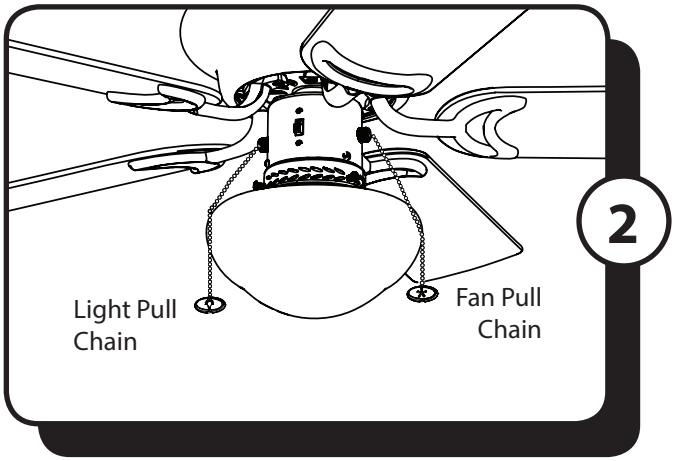

1. Use the fan reverse switch, located on the switch housing to optimize your fan for seasonal performance. Using a ceiling fan will allow you to raise your thermostat setting in summer and lower your thermostat setting in winter without feeling a difference in your comfort.

Note: Wait for the fan to stop before moving the reverse switch.

In warmer weather, push the reverse switch down which will result in downward airflow creating a wind chill effect.

In cooler weather, push the reverse switch up, which will result in upward airflow that can help move stagnant, hot air off the ceiling area.

2. The fan pull chain has four positions to control the fan speed. One pull is HIGH, two is MEDIUM, three is LOW, and four turns the fan OFF. The pull chain in the center of the light kit turns the lights ON and OFF.

Note: When facing the reverse switch, the fan pull chain is on the right and the light pull chain is on the left.

TROUBLESHOOTING

If you have difficulty operating your new ceiling fan, it may be the result of incorrect assembly, installation or wiring. In some cases, these installation errors may be mistaken for defects. If you experience any faults, please check the Troubleshooting section below. If a problem cannot be remedied or you are experiencing difficulty in installation, please contact Customer Service: 1-877-706-3267.

PROBLEM	SUGGESTED REMEDY
1. Fan does not start	1. Check main and branch circuit fuses or circuit breakers. 2. Check power supply wire connections to fan and switch wire connections in switch housing. **CAUTION:** Make sure main power is turned off. 3. Make sure forward/reverse switch pushed completely up or down. Fan will not operate when switch is in the middle. 4. Make sure that the wall control is turned ON.
2. Fan is noisy	1. Make sure all screws in motor housing are snug, but not overtightened. 2. Make sure the screws which attach the blade arm to the motor are tight. 3. Make sure wire connectors in switch housing are not rattling against each other or against the interior wall of the switch housing. **CAUTION:** Make sure main power is turned off before entering switch housing. 4. If using a light kit, be sure the glass shades are finger tight. Check to be sure light bulb are snug in sockets and not touching glass shade(s). If vibration persists from glass, remove glass and install a 1/4 in. wide rubber band on glass neck to act as an insulator. Replace glass and tighten screws against rubber band. 5. Some fan motors are sensitive to signals from Solid State variable speed controls. DO NOT USE a Solid State variable speed control.
3. Fan wobbles	1. Ensure all blades are screwed firmly into blade arms. 2. Ensure all blade arms are tightened securely to motor. 3. Ensure mounting bracket is tightened securely to outlet box and outlet box is mounted firmly to ceiling joist. 4. Switch one blade with a blade from the opposite side. Or balance the fan using a balancing kit. 5. If blade wobble is still noticeable, interchanging two adjacent (side by side) blades can redistribute the weight and possibly result in smoother operation.
4. Light does not work:	1. Ensure the single pin connectors from the switch housing are firmly connected to the single pin connectors from the light kit -- black to black and white to white. 2. Check for loose or disconnected wires in fan switch housing. 3. Check for loose or disconnected wires in light kit. 4. Check for faulty light bulbs. **CAUTION:** Make sure main power is turned off before entering switch housing.

LIMITED LIFETIME WARRANTY

To obtain Service, please contact Customer Service: 1-877-706-3267.

Model Name: 42" Hugger Ceiling Fan
Model No: 50860, 80029, 80092

Subject to the limitations set forth below, Hong Kong China Electric appliance Company (HKC) warrants the fan motor for this ceiling fan to be free from defects in workmanship and material for the life of the product. Also, subject to the limitations below, HKC warrants all ceiling fan parts ("ceiling fan parts" excludes the motor and parts made in whole or in part with glass) to be free from defects in workmanship and material for a period of one year after the date of purchase by the original purchaser at retail.

All claims must be made by the original purchaser, whether such purchaser purchased the product through a store or contractor. Ceiling fan part defects must be reported within the first year from the date of purchase. Parts made in whole or in part with glass and the finishes of metal and other surfaces are not warranted.

Purchasers are responsible for all costs of removing and reinstalling the product. Any damage to any part caused by ordinary wear and tear, accident, misuse, or improper installation, is not covered by this warranty. HKC assumes no responsibility whatsoever for fan installation. Any service performed by a non-licensed electrician will render the warranty invalid.

HKC's sole responsibility shall be to repair or replace the motor, parts, or product within the terms stated above. HKC shall not be liable for any loss or damage of any kind, including any incidental or consequential damages resulting directly or indirectly, from any breach of warranty, express or implied, or any other failure of this product. Some states do not allow the exclusion or limitation of incidental or consequential damages so this limitation may not apply to you.

If the original purchaser ceases to own the fan, this warranty is voided.

Should the purchaser encounter a problem with your fan related to defects in workmanship or materials within the warranty period associated with the defective part, HKC agrees to replace the defective part without charge, or at its option, to replace the ceiling fan with a comparable or superior model.

HKC's warranties are limited to the written warranties set out in this HKC ceiling fan limited lifetime warranty. All other express and implied warranties, including, without limitation, the implied warranty of fitness for a particular purpose and the implied warranty of merchantability are disclaimed. Some states do not allow the disclaimer of implied warranties, so this disclaimer may not apply to you.

To obtain warranty service, please write down your model number and call Customer Service at 1-877-706-3267. Please have a copy of the receipt as proof of purchase.