Specifications

PFUC901

Stainless Steel Undermount Sinks
Plomosa Series

Product Features

- Stainless steel double-bowl sink
- Type 301 nickel-bearing stainless steel
- Undermount
- 18 gauge (1.2 mm)
- Includes sound deadening pads for sound reduction and insulation
- Optional mounting clips available separately (PFUCCLIP)
- DXF cutout file available from ferguson.com/proflo

PFUC901R

General Specifications

- Overall Size: 31-1/4" x 20"
- Bowl Size Large: 16" x 17-1/2"
- Bowl Depth Large: 8"
- Bowl Size Small: 11-1/2" x 15"
- Bowl Depth Small: 8"
- Drain Diameter: 3-1/2"
- Minimum Cabinet Size: 36"

Model Numbers

PFUC901R	31-1/4" x 20" UC RH SS SINK
PFUC901	31-1/4" x 20" UC LH SS SINK

Product Specifications

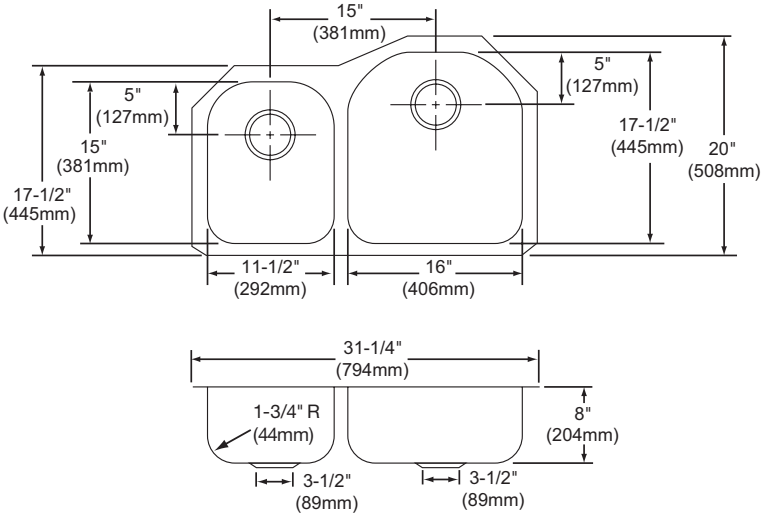

* All measurements are nominal. Please verify before actual installation.

Warranty and Codes

These PROFLO stainless steel sinks carry a limited lifetime warranty. In an effort to continually improve our products, we will make design changes from time to time. We reserve the right to ship newly designed product to fill any order unless it is agreed in writing to do otherwise.

Sink complies with ASME A112.19.3-2008 CSA B45.4-08.

©2022 Ferguson Enterprises, LLC 0422 3937573