Parts Breakdown

LITHGOW
PFWSCM2M116 7735986 / 7735998
4” Modern Two Handle Lavatory Faucet

Model Numbers

PFWSCM2M116 Chrome
PFWSCM2M116BN Brushed nickel

No.	Item	Part Number	Material Type
1.1	Ceramic Disc Cartridge-Cold	OBPF2A507004N	Plastic, Ceramic
1.2	Ceramic Disc Cartridge-Hot	OBPF2A507003N	Plastic, Ceramic

*specify finish

PFWSCM2M116

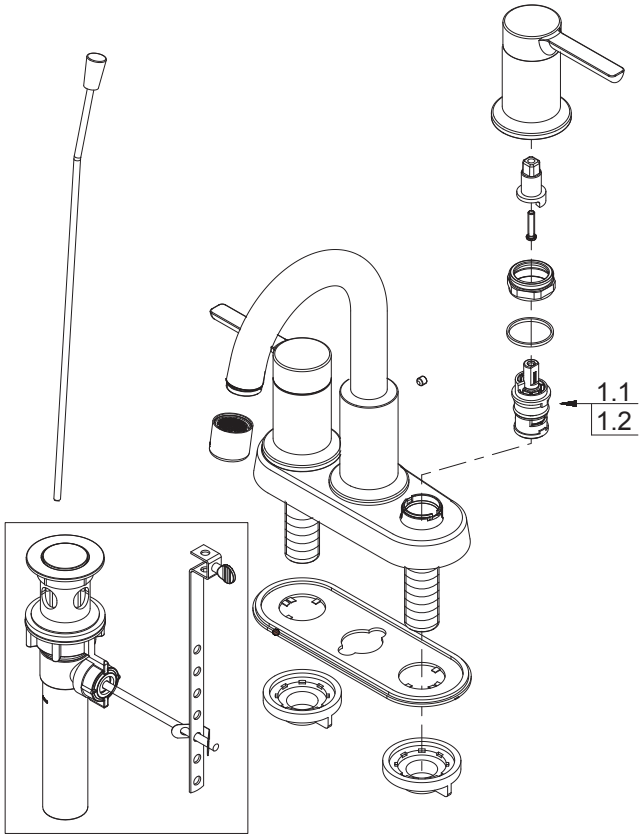

Warranty and Codes

This product comes complete with installation, operating, care and maintenance instructions.
This PROFLO faucet carries a limited lifetime warranty when installed in residential applications.
The warranty is five years in commercial applications.
Compliant with lead content requirements of California AB 1953 and Vermont S.152.

©2021 Ferguson Enterprises, LLC 10/21

PROFLO.COM