Specifications

COLLISTON
PFWSCM2M111 7266421 / 7266456
Two Handle Lavatory Faucet

Product Features

- Ceramic cartridge
- Metal lever handle
- With 50/50 pop up
- Max. flow rate: 1.2 gpm (4.5L/min) at 60 psi
- EPA WaterSense approved
- cUPC/IAPMO listed
- ADA compliant

PFWSCM2M111

Optional Accessories / Available Parts

PFWSCM2M111	Chrome
PFWSCM2M111BN	Brushed nickel

Product Specifications

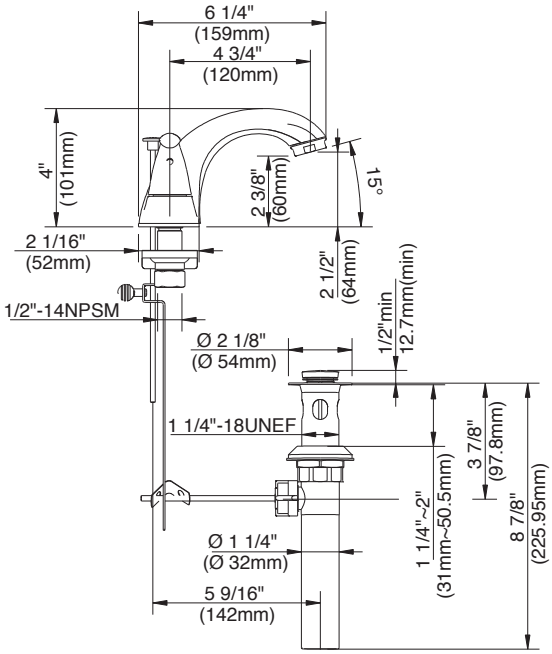

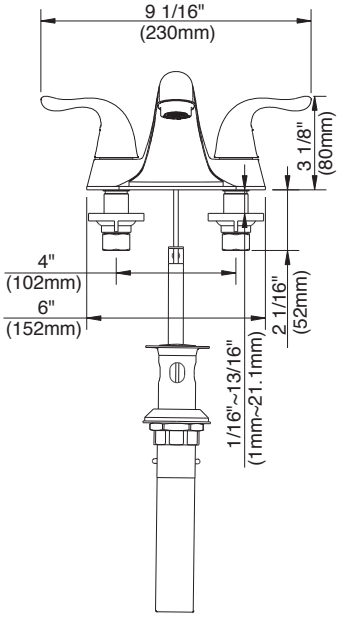

* All measurements are nominal. Please verify before actual installation.

Warranty and Codes

This product comes complete with installation, operating, care and maintenance instructions.
This PROFLO faucet carries a limited lifetime warranty when installed in residential applications.
The warranty is five years in commercial applications.
Compliant with lead content requirements of California AB 1953 and Vermont S.152.

©2021 Ferguson Enterprises, LLC 10/21