Specifications

PFWSC1340G
Two Handle Lavatory Faucet

Product Features

- Ceramic cartridges
- Metal lever handles
- Max. flow rate: 1.2 gpm (4.5 L/min) at 60 psi
- With metal grid drain
- EPA WaterSense approved
- 100% factory pressure tested
- cUPC/IAPMO listed
- ADA Compliant

PFWSC1340GCP

Model Numbers

PFWSC1340GCP Chrome

Product Specifications

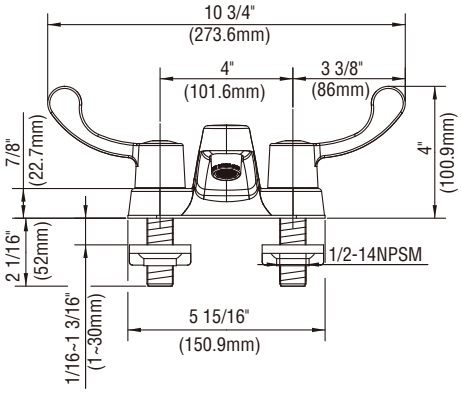

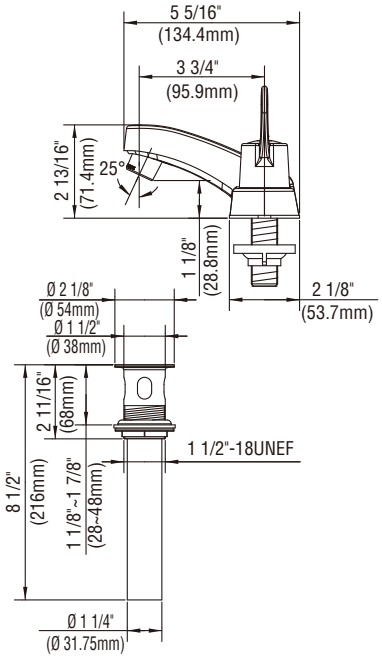

*All measurements are nominal. Please verify before actual installation.

Warranty and Codes

This product comes complete with installation, operating, care and maintenance instructions.
This PROFLO faucet carries a limited lifetime warranty when installed in residential applications.
The warranty is five years in commercial applications.
Compliant with lead content requirements of California AB 1953 and Vermont S.152.

©2022 Ferguson Enterprises, LLC 0422 3672185