SPECIFICATION SHEET

Olympia Faucets
VALUE FOR BUILDERS

T-2301
ELITE SERIES

Single Handle Tub Trim Set
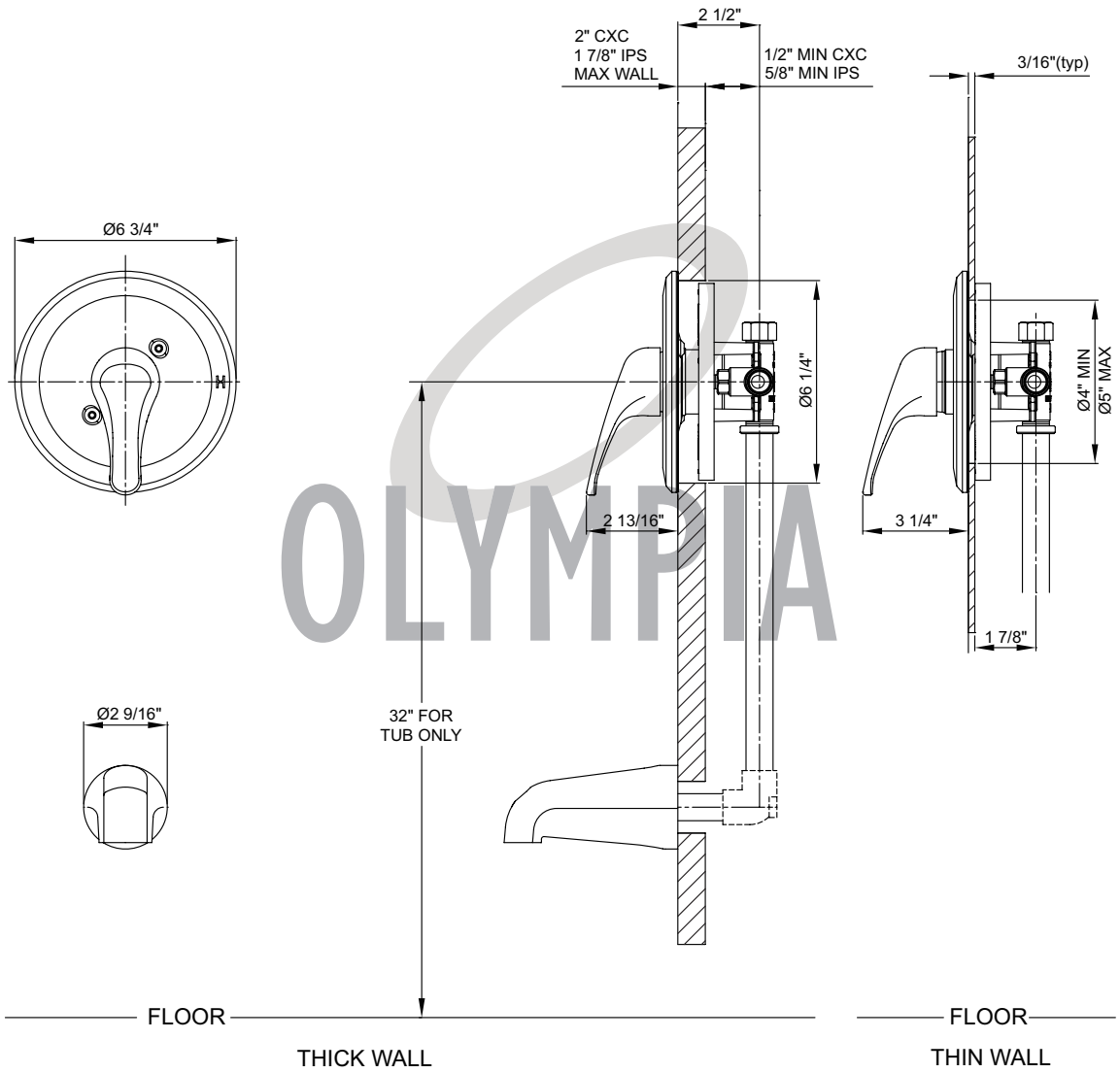
- Metal Lever Handle
- Face Plate
- Ceramic Disc Cartridge with Temperature Limit Cap
- Combo 1/2" IPS/Slip-On Tub Spout
- For Use with V-2300B Or V-2400B Series Valves - Valve not included
- CHROME FINISH