Pfister

Pfirst Series™

8"-15 Widespread Lavatory Faucet

LG149-61P0 Finish*(C)* ❑
LG149-61PK Finish*(K)* ❑
LG149-61PY Finish*(Y)* ❑

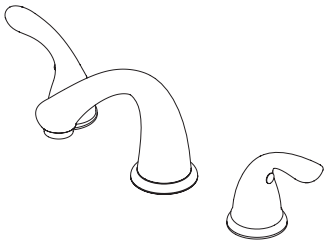

Specifications

- 3-Hole Installation
- Push & Seal™ Drain Included

Features

- 1.2 GPM Flow Rate
- Push & Seal™ Drain Included
- Lever Handles with Red and Blue Indicators
- Washerless Cartridges
- Limited Lifetime Warranty

Code Compliance

Pfister products are designed and manufactured in compliance with the following standards and codes:

- IAPMO Certified to ASME A112.18.1/CSA B125.1
- NSF/ANSI/CAN61:Q≤1
- CEC Certified/CALGreen compliant
- EPA WaterSense Certified
- ADA Compliant – ANSI A117.1 (Lever Handles Only)

Dimensions

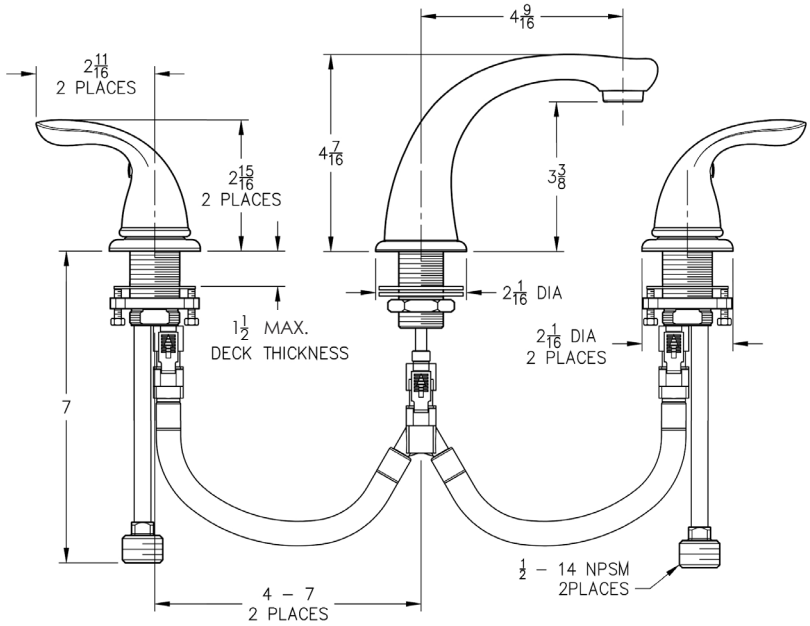

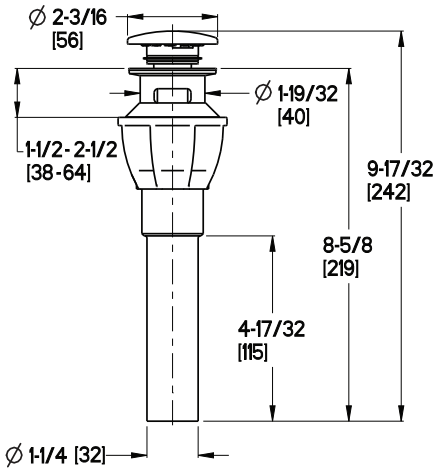

Push & Seal™

Ø1-1/4 Min to Ø1-1/2 Max. Deck Hole Openings

Copyright © 2023, Pfister Inc.