PFISTER

Kelen™

Roman Tub Trim

RT6-4MFC Finish*(C)* ❑
RT6-4MFK Finish*(K)* ❑

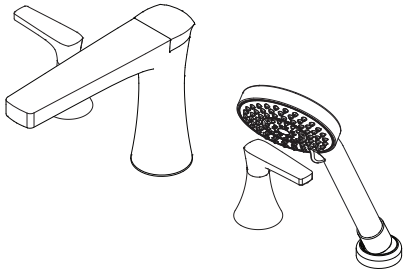

Specifications

- 4-Hole Installation
- Trim Only, Valve Not Included

Features

- 1.2 GPM Flow Rate
- 4-Hole Installation
- All Metal Construction
- Pforever Warranty®

Code Compliance

Pfister products are designed and manufactured in compliance with the following standards and codes:

- IAPMO Certified
- CSA B125 Certified
- ASME A112.18.1

Dimensions

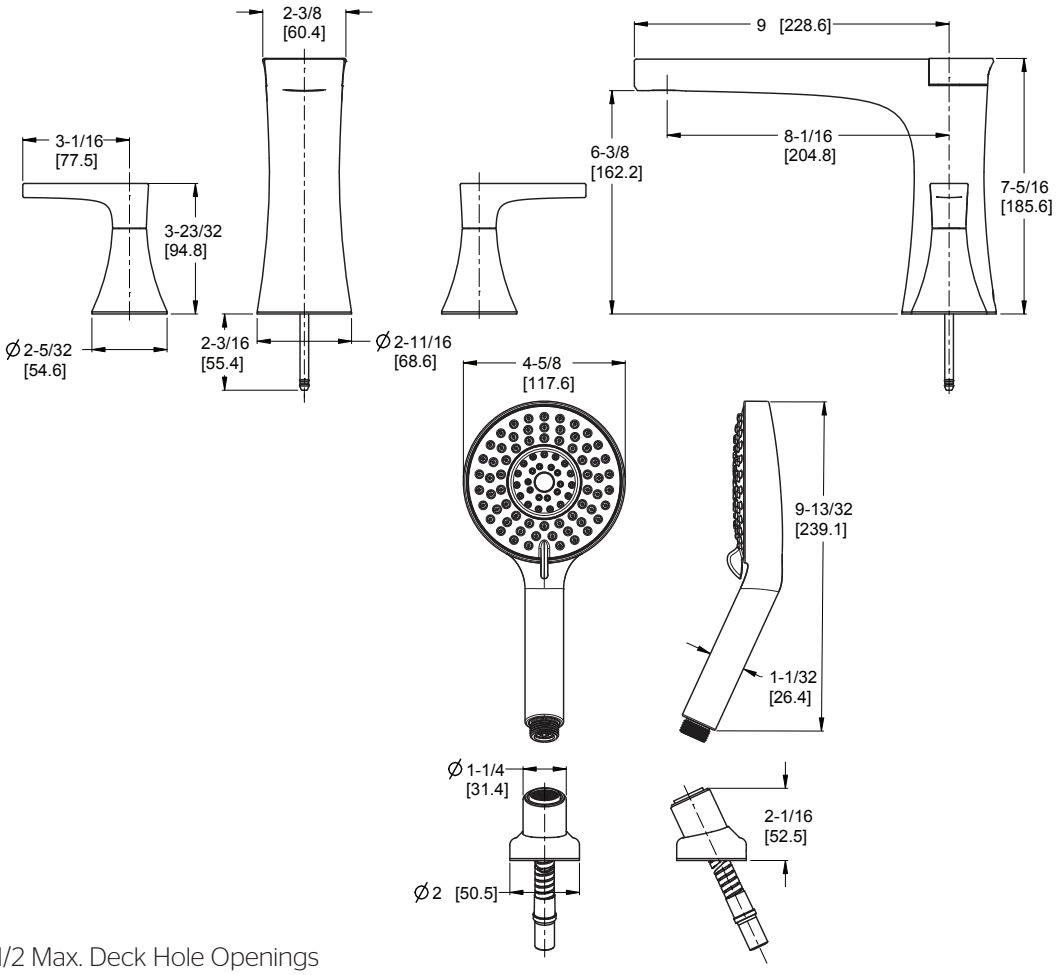

Ø1 Min to Ø1-1/2 Max. Deck Hole Openings

Copyright © 2015, Pfister Inc.