SPECIFICATION SHEET

Olympia Faucets
VALUE FOR BUILDERS

P-1141T
Accent Series

Two Handle Roman Tub Trim Set

- Lever Handles
- C Style Rigid Spout
- 7-1/2” Reach
- 3-Hole 8” to 16” Installation
- Trim Only, P-1131B Valve Required

Code and Standards

- ADA: Compliance to ICC/ANSI A117.1 (Lever Handle Only)
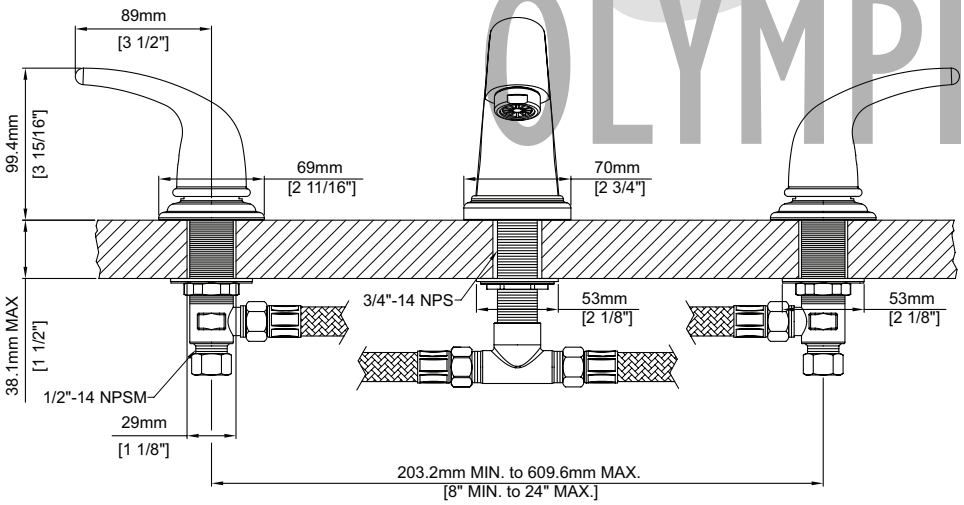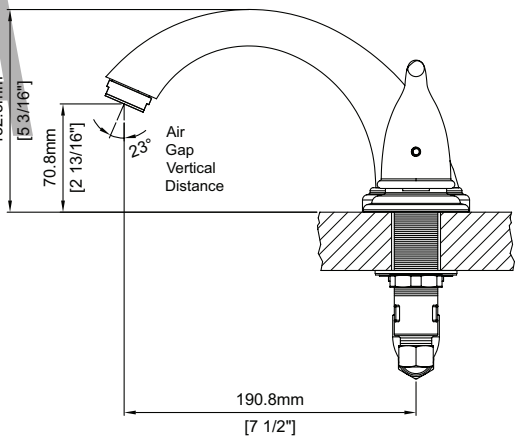
*For other finishes and flow rates offered, please visit our website, email an inquiry to sales@pioneerind.com or contact our sales at 800-338-9468